On-off/soft-start valves MS-EM/EE/DL/DE/SV, MS series

FESTO

On-off/soft-start valves MS-EM/EE/DL/DE/SV, MS series

Product range overview – MS series service units

Type		Size	Pneumatic connection in housing	Connecting plate	Pressure regulation range [bar]						Grade of filtration [µm]			
					0.05 ... 0.7	0.05 ... 2.5	0.1 ... 4	0.3 ... 7	0.1 ... 12	0.5 ... 16	0.01	1	5	40
Code				AG...	D2	D4	D5	D6	D7	D8	A	B	C	E
Service units														
MSB-FRC	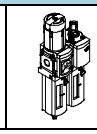	4	G1/8, G1/4	G1/8, G1/4, G3/8	–	–	–	■	■	–	–	–	■	■
		6	G1/4, G3/8, G1/2	G1/4, G3/8, G1/2, G3/4	–	–	–	■	■	–	–	–	■	■
		9	–											
		12	–											
Service unit combinations (further variants can be ordered using the configurator ➔ Internet: msb4, msb6 or msb9)														
MSB	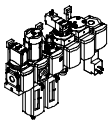	4	G1/4	G1/8, G1/4, G3/8	–	–	–	■	■	–	–	–	■	■
		6	G1/2	G1/4, G3/8, G1/2, G3/4	–	–	–	■	■	–	–	–	■	■
		9	–											
		12	–											
Individual devices														
Filter regulators **MS-LFR**	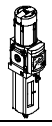	4	G1/8, G1/4	G1/8, G1/4, G3/8	–	–	■	■	■	–	–	–	■	■
		6	G1/4, G3/8, G1/2	G1/4, G3/8, G1/2, G3/4	–	–	■	■	■	■	–	–	■	■
		9	G3/4, G1	G1/2, G3/4, G1, G1 1/4, G1 1/2	–	–	■	■	■	■	–	–	■	■
		12	–	G1, G1 1/4, G1 1/2, G2	–	–	–	■	■	■	–	–	■	■
Filters **MS-LF**	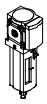	4	G1/8, G1/4	G1/8, G1/4, G3/8	–	–	–	–	–	–	–	–	■	■
		6	G1/4, G3/8, G1/2	G1/4, G3/8, G1/2, G3/4	–	–	–	–	–	–	–	–	■	■
		9	G3/4, G1	G1/2, G3/4, G1, G1 1/4, G1 1/2	–	–	–	–	–	–	–	–	■	■
		12	–	G1, G1 1/4, G1 1/2, G2	–	–	–	–	–	–	–	–	■	■
Fine and micro filters **MS-LFM**	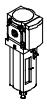	4	G1/8, G1/4	G1/8, G1/4, G3/8	–	–	–	–	–	–	■	■	–	–
		6	G1/4, G3/8, G1/2	G1/4, G3/8, G1/2, G3/4	–	–	–	–	–	–	■	■	–	–
		9	G3/4, G1	G1/2, G3/4, G1, G1 1/4, G1 1/2	–	–	–	–	–	–	■	■	–	–
		12	–	G1, G1 1/4, G1 1/2, G2	–	–	–	–	–	–	■	■	–	–
Activated carbon filters **MS-LFX**	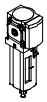	4	G1/8, G1/4	G1/8, G1/4, G3/8	–	–	–	–	–	–	–	–	–	–
		6	G1/4, G3/8, G1/2	G1/4, G3/8, G1/2, G3/4	–	–	–	–	–	–	–	–	–	–
		9	G3/4, G1	G1/2, G3/4, G1, G1 1/4, G1 1/2	–	–	–	–	–	–	–	–	–	–
		12	–	G1, G1 1/4, G1 1/2, G2	–	–	–	–	–	–	–	–	–	–
Water separators **MS-LWS**	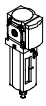	4	–											
		6	G1/4, G3/8, G1/2	G1/4, G3/8, G1/2, G3/4	–	–	–	–	–	–	–	–	–	–
		9	G3/4, G1	G1/2, G3/4, G1, G1 1/4, G1 1/2	–	–	–	–	–	–	–	–	–	–
		12	–											

On-off/soft-start valves MS-EM/EE/DL/DE/SV, MS series

Product range overview – MS series service units

Type	Size	Bowl guard		Condensate drains				Pressure indicator					Security		Options		➔ Page/ Internet
		Plastic bowl with plastic bowl guard	Metal bowl	Manual rotary	Semi-automatic	Fully automatic	External, fully automatic, electrical	Cover plate (without pressure gauge)	Integrated MS pressure gauge	Adapter plate for EN pressure gauge G1/8	Adapter plate for EN pressure gauge G1/4	Pressure sensor	Rotary knob with detent, lockable via accessories	Rotary knob with integrated lock	Silencer	Flow direction from right to left	
Code		R	U	M	H	V	E...	VS	AG	A8	A4	AD...	AS	E11	S	Z	
Service units																	
MSB-FRC	4	■	–	■	–	■	–	–	■	–	–	–	■	–	–	■	msb4
	6	■	■	■	–	■	–	–	■	–	–	–	■	–	–	■	msb6
	9	–															–
	12	–															–
Service unit combinations																	
MSB	4	■	■	■	–	■	–	–	■	–	–	–	■	–	–	■	msb4
	6	■	■	■	–	■	–	–	■	–	–	–	■	–	–	■	msb6
	9	–															–
	12	–															–
Individual devices																	
Filter regulators	4	■	■	■	■	■	–	■	■	■	■	■	■	■	–	■	ms4-lfr
MS-LFR	6	■	■	■	■	■	■	■	■	–	■	■	■	■	–	■	ms6-lfr
	9	–	■	■	■	■	■	■	■	–	■	■	■	■	–	■	ms9-lfr
	12	–	■	■	–	■	■	■	■	–	■	–	■	■	–	■	ms12-lfr
Filters	4	■	■	■	■	■	–	–	–	–	–	–	–	–	–	■	ms4-lf
MS-LF	6	■	■	■	■	■	■	–	–	–	–	–	–	–	–	■	ms6-lf
	9	–	■	■	■	■	■	–	–	–	–	–	–	–	–	■	ms9-lf
	12	–	■	■	–	■	■	–	–	–	–	–	–	–	–	■	ms12-lf
Fine and micro	4	■	■	■	■	■	–	–	–	–	–	–	–	–	–	■	ms4-lfm
filters	6	■	■	■	■	■	■	–	–	–	–	–	–	–	–	■	ms6-lfm
MS-LFM	9	–	■	■	■	■	■	–	–	–	–	–	–	–	–	■	ms9-lfm
	12	–	■	■	–	■	■	–	–	–	–	–	–	–	–	■	ms12-lfm
Activated carbon	4	■	■	–	–	–	–	–	–	–	–	–	–	–	–	■	ms4-lfx
filters	6	■	■	–	–	–	–	–	–	–	–	–	–	–	–	■	ms6-lfx
MS-LFX	9	–	■	–	–	–	–	–	–	–	–	–	–	–	–	■	ms9-lfx
	12	–	■	–	–	–	–	–	–	–	–	–	–	–	–	■	ms12-lfx
Water separators	4	–															–
MS-LWS	6	–	■	–	–	■	■	–	–	–	–	–	–	–	–	■	ms6-lws
	9	–	■	–	–	■	■	–	–	–	–	–	–	–	–	■	ms9-lws
	12	–															–

On-off/soft-start valves MS-EM/EE/DL/DE/SV, MS series

Product range overview – MS series service units

Type		Size	Pneumatic connection in housing	Connecting plate	Pressure regulation range [bar]						Supply voltage			
					0.05 ... 0.7	0.05 ... 2.5	0.1 ... 4	0.3 ... 7	0.1 ... 12	0.5 ... 16	24 V DC, connection pattern to EN 175301	24 V DC, connection pattern M12 to DESINA	110 V AC, connection pattern to EN 175301	230 V AC, connection pattern to EN 175301
Code				AG...	D2	D4	D5	D6	D7	D8	V24	V24P	V110	V230
Individual devices														
Pressure regulators **MS-LR**		4	G⅛, G¼	G⅛, G¼, G⅜	–	–	■	■	■	–	–	–	–	–
		6	G¼, G⅜, G½	G¼, G⅜, G½, G¾	–	–	■	■	■	■	–	–	–	–
		9	G¾, G1	G½, G¾, G1, G1¼, G1½	–	–	■	■	■	■	–	–	–	–
		12	–	G1, G1¼, G1½, G2	–	–	–	■	■	■	–	–	–	–
Pressure regulators **MS-LRB**		4	G¼	G⅛, G¼, G⅜	–	–	■	■	■	–	–	–	–	–
		6	G½	G¼, G⅜, G½, G¾	–	–	■	■	■	■	–	–	–	–
		9	–											
		12	–											
Precision pressure regulators **MS-LRP**		4	–											
		6	G¼, G⅜, G½	G¼, G⅜, G½, G¾	■	■	■	–	■	–	–	–	–	–
		9	–											
		12	–											
Precision pressure regulators **MS-LRPB**		4	–											
		6	G½	G¼, G⅜, G½, G¾	■	■	■	–	■	–	–	–	–	–
		9	–											
		12	–											
Electrical pressure regulators **MS-LRE**	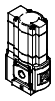	4	–											
		6	G¼, G⅜, G½	G¼, G⅜, G½, G¾	–	–	■	■	■	■	–	–	–	–
		9	–											
		12	–											
Lubricators **MS-LOE**	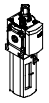	4	G⅛, G¼	G⅛, G¼, G⅜	–	–	–	–	–	–	–	–	–	–
		6	G¼, G⅜, G½	G¼, G⅜, G½, G¾	–	–	–	–	–	–	–	–	–	–
		9	G¾, G1	G½, G¾, G1, G1¼, G1½	–	–	–	–	–	–	–	–	–	–
		12	–	G1, G1¼, G1½, G2	–	–	–	–	–	–	–	–	–	–
Electrical on-off valves **MS-EM(1)**		4	G⅛, G¼	G⅛, G¼, G⅜	–	–	–	–	–	–	–	–	–	–
		6	G¼, G⅜, G½	G¼, G⅜, G½, G¾	–	–	–	–	–	–	–	–	–	–
		9	G¾, G1	G½, G¾, G1, G1¼, G1½	–	–	–	–	–	–	–	–	–	–
		12	–	G1, G1¼, G1½, G2	–	–	–	–	–	–	–	–	–	–
Electrical on-off valves **MS-EE**		4	G⅛, G¼	G⅛, G¼, G⅜	–	–	–	–	–	–	■	–	■	■
		6	G¼, G⅜, G½	G¼, G⅜, G½, G¾	–	–	–	–	–	–	■	–	■	■
		9	G¾, G1	G½, G¾, G1, G1¼, G1½	–	–	–	–	–	–	■	■	■	■
		12	–	G1, G1¼, G1½, G2	–	–	–	–	–	–	■	■	■	■
Electrical soft-start valves **MS-DL**		4	G⅛, G¼	G⅛, G¼, G⅜	–	–	–	–	–	–	–	–	–	–
		6	G¼, G⅜, G½	G¼, G⅜, G½, G¾	–	–	–	–	–	–	–	–	–	–
		9	–											
		12	–	G1, G1¼, G1½, G2	–	–	–	–	–	–	–	–	–	–
Electrical soft-start valves **MS-DE**		4	G⅛, G¼	G⅛, G¼, G⅜	–	–	–	–	–	–	■	–	■	■
		6	G¼, G⅜, G½	G¼, G⅜, G½, G¾	–	–	–	–	–	–	■	–	■	■
		9	–											
		12	–	G1, G1¼, G1½, G2	–	–	–	–	–	–	■	■	■	■
Soft start and exhaust valves **MS-SV**	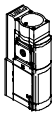	4	–											
		6	G½	G¼, G⅜, G½, G¾	–	–	–	–	–	–	■	–	–	–
		9	–											
		12	–											

On-off/soft-start valves MS-EM/EE/DL/DE/SV, MS series

Product range overview – MS series service units

Type	Size	Bowl guard		Pressure indicator					Security		Options		➔ Page/ Internet
		Plastic bowl with plastic bowl guard	Metal bowl	Cover plate (without pressure gauge)	Integrated MS pressure gauge	Adapter plate for EN pressure gauge G1/8	Adapter plate for EN pressure gauge G1/4	Pressure sensor	Rotary knob with detent, lockable via accessories	Rotary knob with integrated lock	Silencer	Flow direction from right to left	
Code		R	U	VS	AG	A8	A4	AD...	AS	E11	S	Z	
Individual devices													
Pressure regulators **MS-LR**	4	–	–	■	■	■	■	■	■	■	–	■	ms4-lr
	6	–	–	■	■	–	■	■	■	■	–	■	ms6-lr
	9	–	–	■	■	–	■	■	■	■	–	■	ms9-lr
	12	–	–	■	■	–	■	–	■	■	–	■	ms12-lr
Pressure regulators **MS-LRB**	4	–	–	■	■	■	■	■	■	■	–	■	ms4-lrb
	6	–	–	■	■	–	■	■	■	■	–	■	ms6-lrb
	9	–											–
	12	–											–
Precision pressure regulators **MS-LRP**	4	–											–
	6	–	–	■	–	■	■	■	■	■	–	■	ms6-lrp
	9	–											–
	12	–											–
Precision pressure regulators **MS-LRPB**	4	–											–
	6	–	–	■	–	■	■	■	■	■	–	■	ms6-lrpb
	9	–											–
	12	–											–
Electrical pressure regulators **MS-LRE**	4	–											–
	6	–	–	■	■	–	■	–	–	–	–	■	ms6-lre
	9	–											–
	12	–											–
Lubricators **MS-LOE**	4	■	■	–	–	–	–	–	–	–	–	■	ms4-loe
	6	■	■	–	–	–	–	–	–	–	–	■	ms6-loe
	9	–	■	–	–	–	–	–	–	–	–	■	ms9-loe
	12	–	■	–	–	–	–	–	–	–	–	■	ms12-loe
Electrical on-off valves **MS-EM(1)**	4	–	–	■	■	■	■	■	–	–	■	■	8
	6	–	–	■	■	–	■	■	–	–	■	■	8
	9	–	–	■	■	–	■	–	–	–	■	■	64
	12	–	–	■	■	–	■	–	–	–	■	■	82
Electrical on-off valves **MS-EE**	4	–	–	■	■	■	■	■	–	–	■	■	18
	6	–	–	■	■	–	■	■	–	–	■	■	18
	9	–	–	■	■	–	■	–	–	–	■	■	72
	12	–	–	■	■	–	■	–	–	–	■	■	88
Electrical soft-start valves **MS-DL**	4	–	–	■	■	■	■	■	–	–	–	■	30
	6	–	–	■	■	–	■	■	–	–	–	■	30
	9	–											–
	12	–	–	■	■	–	■	–	–	–	–	■	94
Electrical soft-start valves **MS-DE**	4	–	–	■	■	■	■	■	–	–	–	■	38
	6	–	–	■	■	–	■	■	–	–	–	■	38
	9	–											–
	12	–	–	■	■	–	■	–	–	–	–	■	100
Soft start and exhaust valves **MS-SV**	4	–											–
	6	–	–	■	■	–	■	■	–	–	■	■	50
	9	–											–
	12	–											–

On-off/soft-start valves MS-EM/EE/DL/DE/SV, MS series

Product range overview – MS series service units

Type		Size	Pneumatic connection in housing	Connecting plate	Pressure regulation range [bar]				Supply voltage			
					0.1 ... 4	0.3 ... 7	0.1 ... 12	0.5 ... 16	24 V DC, connection pattern to EN 175301	24 V DC, connection pattern M12 to DESINA	110 V AC, connection pattern to EN 175301	230 V AC, connection pattern to EN 175301
Code				AG...	D5	D6	D7	D8	V24	V24P	V110	V230
Individual devices												
Membrane air dryers **MS-LDM1**	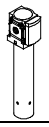	4	G⅛, G¼	G⅛, G¼, G⅜	–	–	–	–	–	–	–	–
		6	G¼, G⅜, G½	G¼, G⅜, G½, G¾	–	–	–	–	–	–	–	–
		9	–									
		12	–									
Branching modules **MS-FRM**		4	G⅛, G¼	G⅛, G¼, G⅜	–	–	–	–	–	–	–	–
		6	G¼, G⅜, G½	G¼, G⅜, G½, G¾	–	–	–	–	–	–	–	–
		9	G¾, G1	G½, G¾, G1, G1¼, G1½	–	–	–	–	–	–	–	–
		12	–	G1, G1¼, G1½, G2	–	–	–	–	–	–	–	–
Distributor blocks **MS-FRM-FRZ**		4	G¼	–	–	–	–	–	–	–	–	–
		6	G½	–	–	–	–	–	–	–	–	–
		9	–									
		12	–									
Flow sensors **SFAM**		4	–									
		6	G½	G½	–	–	–	–	–	–	–	–
		9	–	G1, G1½	–	–	–	–	–	–	–	–
		12	–									

On-off/soft-start valves MS-EM/EE/DL/DE/SV, MS series

Product range overview – MS series service units

Type	Size	Bowl guard		Pressure indicator					Switch output		Options		➔ Page/ Internet
		Plastic bowl with plastic bowl guard	Metal bowl	Cover plate (without pressure gauge)	Integrated MS pressure gauge	Adapter plate for EN pressure gauge G⅛	Adapter plate for EN pressure gauge G¼	Pressure sensor	2x PNP or NPN, 1 analogue output 4 ... 20 mA	2x PNP or NPN, 1 analogue output 0 ... 10 V	Silencer	Flow direction from right to left	
Code		R	U	VS	AG	A8	A4	AD...	2SA	2SV	S	Z/R	
Individual devices													
Membrane air dryers **MS-LDM1**	4	–	■	–	–	–	–	–	–	–	–	■	ms4-ldm1
	6	–	■	–	–	–	–	–	–	–	–	■	ms6-ldm1
	9	–											–
	12	–											–
Branching modules **MS-FRM**	4	–	–	■	■	■	■	■	–	–	–	■	ms4-frm
	6	–	–	■	■	–	■	■	–	–	–	■	ms6-frm
	9	–	–	■	■	–	■	■	–	–	–	■	ms9-frm
	12	–	–	■	–	–	–	–	–	–	–	–	ms12-frm
Distributor blocks **MS-FRM-FRZ**	4	–	–	–	–	–	–	–	–	–	–	■	ms4-frm
	6	–	–	–	–	–	–	–	–	–	–	■	ms6-frm
	9	–											–
	12	–											–
Flow sensors **SFAM**	4	–											–
	6	–	–	–	–	–	–	–	■	■	–	■	sfam-62
	9	–	–	–	–	–	–	–	■	■	–	■	sfam-90
	12	–											–

On-off valves MS4/MS6-EM1, MS series

Peripherals overview

On-off valve MS4/MS6-EM1

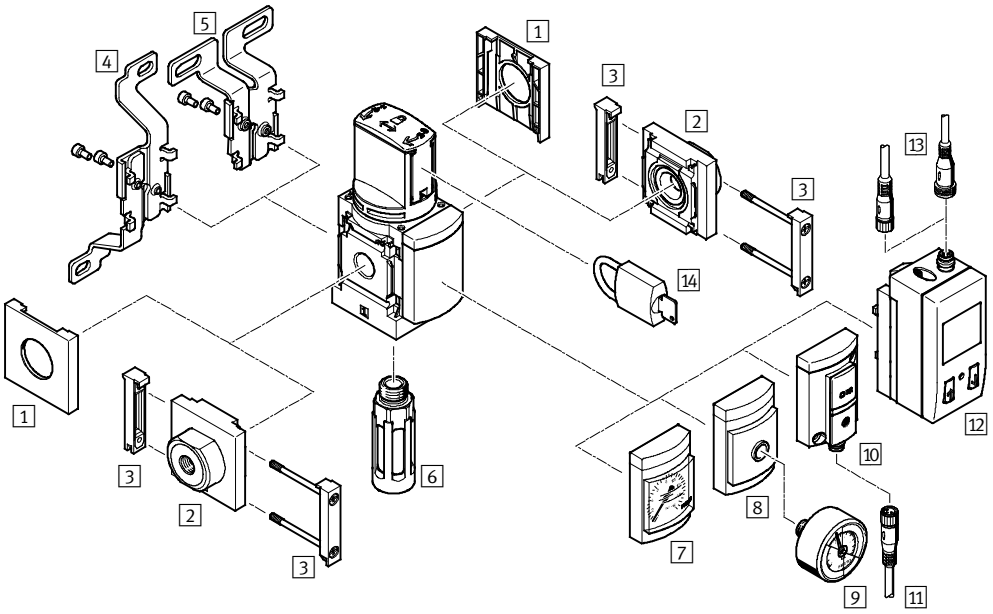

- Note

Additional accessories:

- Module connector for combination with size MS4/MS6 or size MS9 ➔ Internet: amv, rmv, armv
- Adapter plate for mounting on profiles ➔ Internet: ipm-80, ipm-40-80, ipm-80-80

Mounting attachments and accessories

		Individual device		Combination		➔ Page/Internet
		Without connecting plate	With connecting plate	Without connecting plate	With connecting plate	
1	Cover cap MS4/6-END	■	–	■	–	ms4-end, ms6-end
2	Connecting plate MS4/6-AG...	–	■	–	■	ms4-ag, ms6-ag
3	Module connector MS4/6-MV	–	■	■	■	ms4-mv, ms6-mv
4	Mounting bracket MS4/6-WB	■	■	–	–	ms4-wb, ms6-wb
5	Mounting bracket MS4-WBM	■	■	–	–	ms4-wbm
6	Silencer U	■	■	■	■	107
7	MS pressure gauge AG/RG	■	■	■	■	16
8	Adapter plate for EN pressure gauge 1⁄8/1⁄4 A8/A4	■	■	■	■	16
9	Pressure gauge MA	■	■	■	■	107
10	Pressure sensor without display AD7 ... AD10	■	■	■	■	16
11	Connecting cable NEBU-M8...-LE3	■	■	■	■	107
12	Pressure sensor with display AD1 ... AD4	■	■	■	■	16
13	Connecting cable NEBU-M8...-LE3/NEBU-M12...-LE4	■	■	■	■	107
14	Padlock LRVS-D	■	■	■	■	107
–	Mounting bracket MS4/6-WP/WPB/WPE/WPM	–	■	■	■	ms4-wp, ms6-wp

On-off valves MS4/MS6-EM1, MS series

Type codes

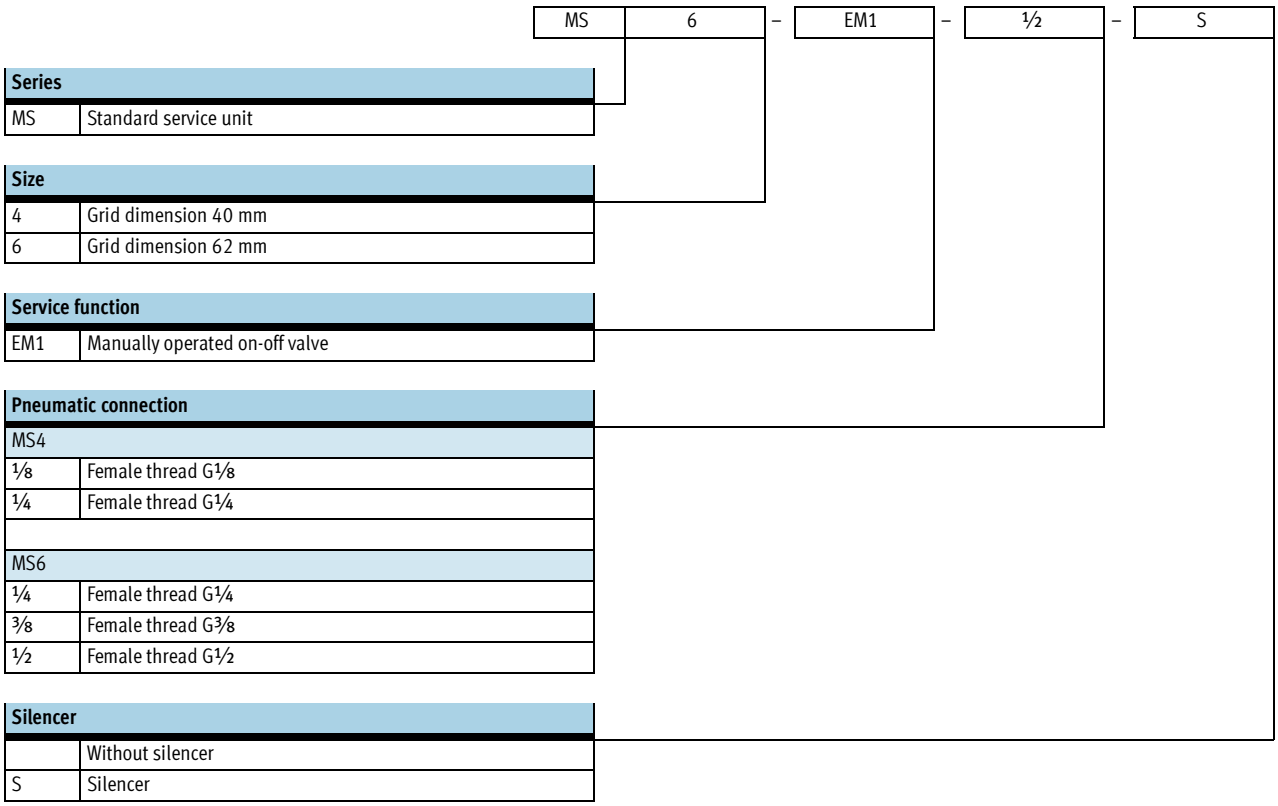

Series	
MS	Standard service unit

Size	
4	Grid dimension 40 mm
6	Grid dimension 62 mm

Service function	
EM1	Manually operated on-off valve

Pneumatic connection	
MS4	
⅛	Female thread G⅛
¼	Female thread G¼
MS6	
¼	Female thread G¼
⅜	Female thread G⅜
½	Female thread G½

Silencer	
	Without silencer
S	Silencer

Additional variants can be ordered using the modular system ➔ 16

- Connecting plates
- Pressure gauge/pressure gauge alternatives
- Alternative pressure gauge scale
- Type of mounting
- Flow direction

On-off valves MS4/MS6-EM1, MS series

Technical data

Function

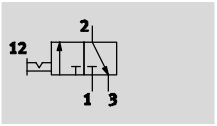

- Flow rate
  1,200 ... 8,700 l/min
- Temperature range
  –10 ... +60 °C
- Operating pressure
  0 ... 18 bar

- Manually operated on-off valve for pressurising and venting pneumatic installations
- The valve is activated by turning the rotary knob
- At connection 3 there is the facility to attach a silencer and/or to duct the exhaust air
- When the valve is closed, the rotary knob can be secured with a padlock
- Optional pressure gauge
- Optional pressure sensor

General technical data					
Size	MS4		MS6		
Pneumatic connection 1, 2	G⅛	G¼	G¼	G⅜	G½
Pneumatic connection 3	G¼		G½		
Design	Rotary slide valve				
Type of mounting	Via accessories				
	In-line installation				
Assembly position	Any				
Pressure indicator	Via pressure sensor for displaying output pressure via LCD display and electrical output				
	Via pressure sensor for displaying output pressure via operational status indicator and electrical output				
	Via pressure gauge for displaying output pressure				
	Via pressure gauge with red/green scale for displaying output pressure				
	G¼ prepared				
	G⅛ prepared		–		
Valve function	3/2-way valve, double solenoid				
Exhaust function	No flow control				
Switching position display	Knob actuator direction = flow direction				
Pilot control mode	Direct				
Direction of flow	Non-reversible				
C value [l/(s*bar)]	4.6	9.0	10.7	21.2	30.8
b value	0.51	0.39	0.56	0.49	0.57

Note: This product conforms to ISO 1179-1 and to ISO 228-1

Standard nominal flow rate qnN[1] [l/min]					
Size	MS4		MS6		
Pneumatic connection	G⅛	G¼	G¼	G⅜	G½
In main flow direction 1 → 2	1,200	2,200	3,000	5,500	8,700
In relief direction 2 → 3	1,900	1,700	6,800	6,600	6,200

1) Measured at p1 = 6 bar and p2 = 5 bar, Δp = 1 bar

On-off valves MS4/MS6-EM1, MS series

Technical data

Operating and environmental conditions					
Variant		Standard		Pressure sensor AD...	
Size		MS4	MS6	MS4	MS6
Operating pressure	[bar]	0 ... 14	0 ... 18	0 ... 10	0 ... 10
Operating medium		Compressed air in accordance with ISO 8573-1:2010 [7:4:4]			
		Inert gases			
Note on operating/pilot medium		Operation with lubricated medium possible (in which case lubricated operation will always be required)			
Ambient temperature	[°C]	–10 ... +60	–10 ... +60	0 ... +50	0 ... +50
Temperature of medium	[°C]	–10 ... +60	–10 ... +60	0 ... +50	0 ... +50
Corrosion resistance	CRC[1)]	2			

1) Corrosion resistance class 2 according to Festo standard 940 070
Components requiring moderate corrosion resistance. Externally visible parts with primarily decorative surface requirements which are in direct contact with a normal industrial environment or media such as coolants or lubricating agents.

Weights [g]		
Size	MS4	MS6
On-off valve	190	580
On-off valve with silencer S	210	655

Materials

Sectional view

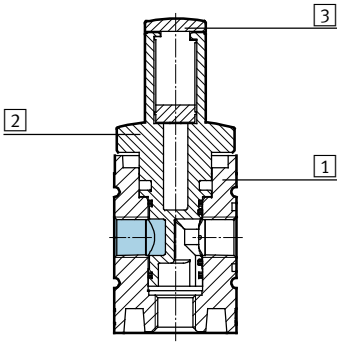

On-off valve		
1	Body	Die-cast aluminium
2	Rotary valve	PA reinforced
3	Lock slide	PA reinforced
–	Seals	NBR, TPE-U(PU)
Note on materials		RoHS-compliant
		Free of copper and PTFE (not with variants AG or AD...)

Dimensions – Basic version Download CAD data ➔ **www.festo.com**

With female thread, with cover plate

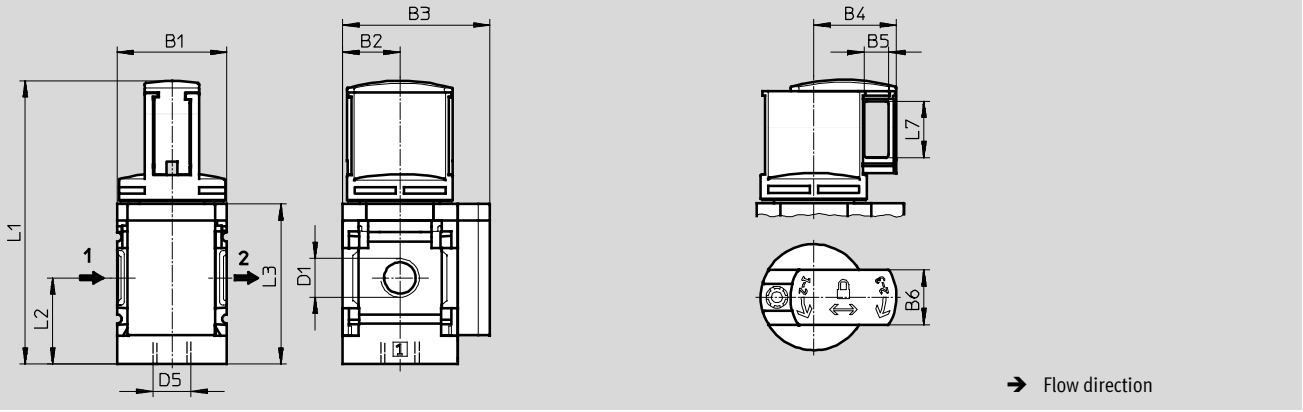

Type	B1	B2	B3	B4	B5	B6	D1	D5	L1	L2	L3	L7
MS4-EM1-⅛	40	21	54	30	9	20	G⅛	G¼	104	31.5	59	20.6
MS4-EM1-¼							G¼					
MS6-EM1-¼	62	31	76	45	10	24	G¼	G½	150.9	45.5	84.5	28.2
MS6-EM1-⅜							G⅜					
MS6-EM1-½							G½					

Note: This product conforms to ISO 1179-1 and to ISO 228-1

Dimensions – Pressure gauge/pressure gauge alternatives Download CAD data ➔ **www.festo.com**

Integrated MS pressure gauge with standard scale AG or red-green scale RG, display unit [bar]

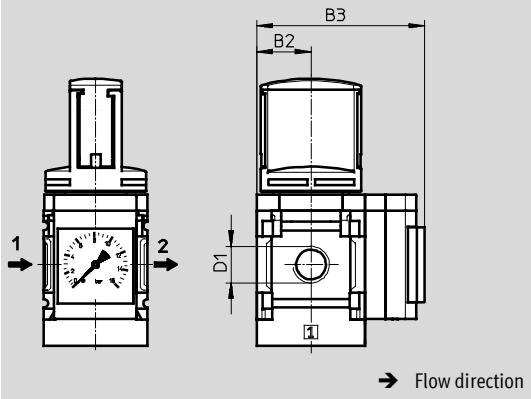

Adapter plate A8/A4 for EN pressure gauge 1⁄8/1⁄4, without pressure gauge

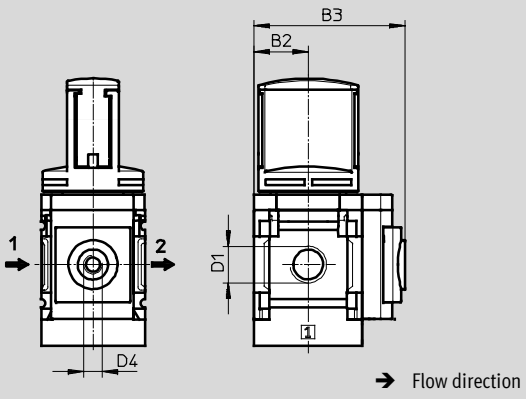

Type	B2	B3	D1	D4
MS4-EM1-1⁄8-...-AG	21	65	G1⁄8	–
MS4-EM1-1⁄4-...-AG			G1⁄4	
MS4-EM1-1⁄8-...-RG	21	66.5	G1⁄8	–
MS4-EM1-1⁄4-...-RG			G1⁄4	
MS4-EM1-1⁄8-...-A8	21	58.5	G1⁄8	G1⁄8
MS4-EM1-1⁄4-...-A8			G1⁄4	
MS4-EM1-1⁄8-...-A4	21	58.5	G1⁄8	G1⁄4
MS4-EM1-1⁄4-...-A4			G1⁄4	
MS6-EM1-1⁄4-...-AG	31	85	G1⁄4	–
MS6-EM1-3⁄8-...-AG			G3⁄8	
MS6-EM1-1⁄2-...-AG			G1⁄2	
MS6-EM1-1⁄4-...-RG	31	86.5	G1⁄4	–
MS6-EM1-3⁄8-...-RG			G3⁄8	
MS6-EM1-1⁄2-...-RG			G1⁄2	
MS6-EM1-1⁄4-...-A4	31	78.5	G1⁄4	G1⁄4
MS6-EM1-3⁄8-...-A4			G3⁄8	
MS6-EM1-1⁄2-...-A4			G1⁄2	

Note: This product conforms to ISO 1179-1 and to ISO 228-1

Dimensions – Pressure gauge/pressure gauge alternatives Download CAD data ➔ **www.festo.com**

Pressure sensor with LCD display AD1 ... AD4 Technical data ➔ Internet: sde1

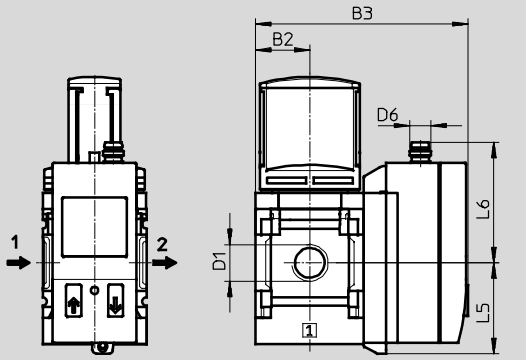

➔ Flow direction

Variant AD1:
SDE1-D10-G2-MS-L-P1-M8 with 3-pin plug M8x1, 1 switching output PNP

Variant AD2:
SDE1-D10-G2-MS-L-N1-M8 with 3-pin plug M8x1, 1 switching output NPN

Variant AD3:
SDE1-D10-G2-MS-L-PI-M12 with 4-pin plug M12x1, 1 switching output PNP and 4 ... 20 mA analogue

Variant AD4:
SDE1-D10-G2-MS-L-NI-M12 with 4-pin plug M12x1, 1 switching output NPN and 4 ... 20 mA analogue

Pressure sensor with operational status indicator AD7 ... AD10 Technical data ➔ Internet: sde5

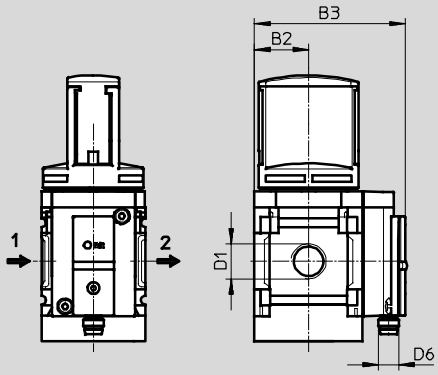

➔ Flow direction

Variant AD7:
SDE5-D10-O-...-P-M8 with 3-pin plug M8x1, threshold value comparator, 1 switching output PNP, N/O contact

Variant AD8:
SDE5-D10-C-...-P-M8 with 3-pin plug M8x1, threshold value comparator, 1 switching output PNP, N/C contact

Variant AD9:
SDE5-D10-O3-...-P-M8 with 3-pin plug M8x1, window comparator, 1 switching output PNP, N/O contact

Variant AD10:
SDE5-D10-C3-...-P-M8 with 3-pin plug M8x1, window comparator, 1 switching output PNP, N/C contact

Type	B2	B3	D1	D6	L5	L6
MS4-EM1-⅛-...-AD1/AD2	21	82.6	G⅛	M8x1	35.1	46.7
MS4-EM1-¼-...-AD1/AD2			G¼			
MS4-EM1-⅛-...-AD3/AD4	21	82.6	G⅛	M12x1	35.1	55.8
MS4-EM1-¼-...-AD3/AD4			G¼			
MS4-EM1-⅛-...-AD7/AD8/AD9/AD10	21	59.1	G⅛	M8x1	–	–
MS4-EM1-¼-...-AD7/AD8/AD9/AD10			G¼			
MS6-EM1-¼-...-AD1/AD2	31	103	G¼	M8x1	35.1	46.7
MS6-EM1-⅜-...-AD1/AD2			G⅜			
MS6-EM1-½-...-AD1/AD2			G½			
MS6-EM1-¼-...-AD3/AD4	31	103	G¼	M12x1	35.1	55.8
MS6-EM1-⅜-...-AD3/AD4			G⅜			
MS6-EM1-½-...-AD3/AD4			G½			
MS6-EM1-¼-...-AD7/AD8/AD9/AD10	31	79	G¼	M8x1	–	–
MS6-EM1-⅜-...-AD7/AD8/AD9/AD10			G⅜			
MS6-EM1-½-...-AD7/AD8/AD9/AD10			G½			

Note: This product conforms to ISO 1179-1 and to ISO 228-1

Dimensions – Silencer Download CAD data ➔ **www.festo.com**

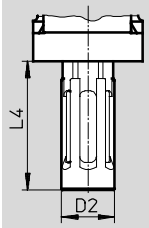

Type	D2	L4
MS4-EM1-...-S	19.5	47
MS6-EM1-...-S	28	106

Ordering data

Size	Connection	Standard		With silencer	
		Part No.	Type	Part No.	Type
MS4	G⅛	**541262**	**MS4-EM1-⅛[1)]**	**541263**	**MS4-EM1-⅛-S[1)]**
	G¼	**541258**	**MS4-EM1-¼[1)]**	**541259**	**MS4-EM1-¼-S[1)]**
MS6	G¼	**541271**	**MS6-EM1-¼[1)]**	**541272**	**MS6-EM1-¼-S[1)]**
	G⅜	**541275**	**MS6-EM1-⅜[1)]**	**541276**	**MS6-EM1-⅜-S[1)]**
	G½	**541267**	**MS6-EM1-½[1)]**	**541268**	**MS6-EM1-½-S[1)]**

1) Free of copper and PTFE

On-off valves MS4/MS6-EM1, MS series

Ordering data – Modular products

FESTO

M Mandatory data

Module No.	Series	Size		Function		Pneumatic connection
541266 541279	MS	4 6		EM1		1/8, 1/4, 3/8, 1/2, AGA, AGB, AGC, AGD, AGE
Order example						
541266	**MS**	**4**	**–**	**EM1**	**–**	**1/4**

Ordering table

Grid dimension [mm]		40	62	Condi-tions	Code		Enter code
M	Module No.	**541266**	**541279**				
	Series	Standard			**MS**		MS
	Size	4	6		**...**		
	Function	On-off valve, manual			**-EM1**		-EM1
	Pneumatic connection	Female thread G1/8	–		**-1/8**		
		Female thread G1/4	Female thread G1/4		**-1/4**		
		–	Female thread G3/8		**-3/8**		
		–	Female thread G1/2		**-1/2**		
		Connecting plate G1/8	–		**-AGA**		
		Connecting plate G1/4	Connecting plate G1/4		**-AGB**		
		Connecting plate G3/8	Connecting plate G3/8		**-AGC**		
		–	Connecting plate G1/2		**-AGD**		
↓		–	Connecting plate G3/4		**-AGE**		

Transfer order code

	MS		**–**	**EM1**	**–**	

➔ 0 **Options**

	Silencer		Pressure gauge/pressure gauge alternatives		Alternative pressure gauge scale		Type of mounting		Flow direction
	S		AG, A8, A4, RG, AD1 ... AD4, AD7 ... AD10		PSI, MPA		WP, WPM, WB, WBM		Z
–	**S**	–	**AG**	–	**PSI**	–	**WB**	–	**Z**

Ordering table

Grid dimension [mm]		40	62	Conditions	Code		Enter code
0	Silencer	Silencer			**-S**		
	Pressure gauge/pressure gauge alternatives	MS pressure gauge, bar (with adapter plate)	MS pressure gauge, bar		**-AG**		
		Adapter plate for EN pressure gauge 1⁄8, without pressure gauge	–		**-A8**		
		Adapter plate for EN pressure gauge 1⁄4, without pressure gauge			**-A4**		
		Integrated pressure gauge, red-green scale			**-RG**		
		Pressure sensor with LCD display, plug M8, 1 switching output PNP, 3-pin		1	**-AD1**		
		Pressure sensor with LCD display, plug M8, 1 switching output NPN, 3-pin		1	**-AD2**		
		Pressure sensor with LCD display, plug M12, 1 switching output PNP, 4-pin, analogue output 4 ... 20 mA		1	**-AD3**		
		Pressure sensor with LCD display, plug M12, 1 switching output NPN, 4-pin, analogue output 4 ... 20 mA		1	**-AD4**		
		Pressure sensor with operational status indicator, plug M8, threshold value comparator, PNP, N/O contact		1	**-AD7**		
		Pressure sensor with operational status indicator, plug M8, threshold value comparator, PNP, N/C contact		1	**-AD8**		
		Pressure sensor with operational status indicator, plug M8, window comparator, PNP, N/O contact		1	**-AD9**		
		Pressure sensor with operational status indicator, plug M8, window comparator, PNP, N/C contact		1	**-AD10**		
	Alternative pressure gauge scale	psi		2	**-PSI**		
		MPa		2	**-MPA**		
	Type of mounting	Mounting bracket		3	**-WP**		
		Mounting bracket		3	**-WPM**		
		Mounting bracket			**-WB**		
		Mounting bracket	–		**-WBM**		
	Flow direction	Flow direction from right to left			**-Z**		

1 **AD1 ... AD4, AD7 ... AD10** Measuring range max. 10 bar

2 **PSI, MPA** Only with pressure gauge AG or RG

3 **WP, WPM** Only with connecting plate AGA, AGB, AGC, AGD or AGE

Transfer order code

–		–		–		–		–	

On-off valves MS4/MS6-EE, MS series

Peripherals overview

FESTO

On-off valve MS4/MS6-EE

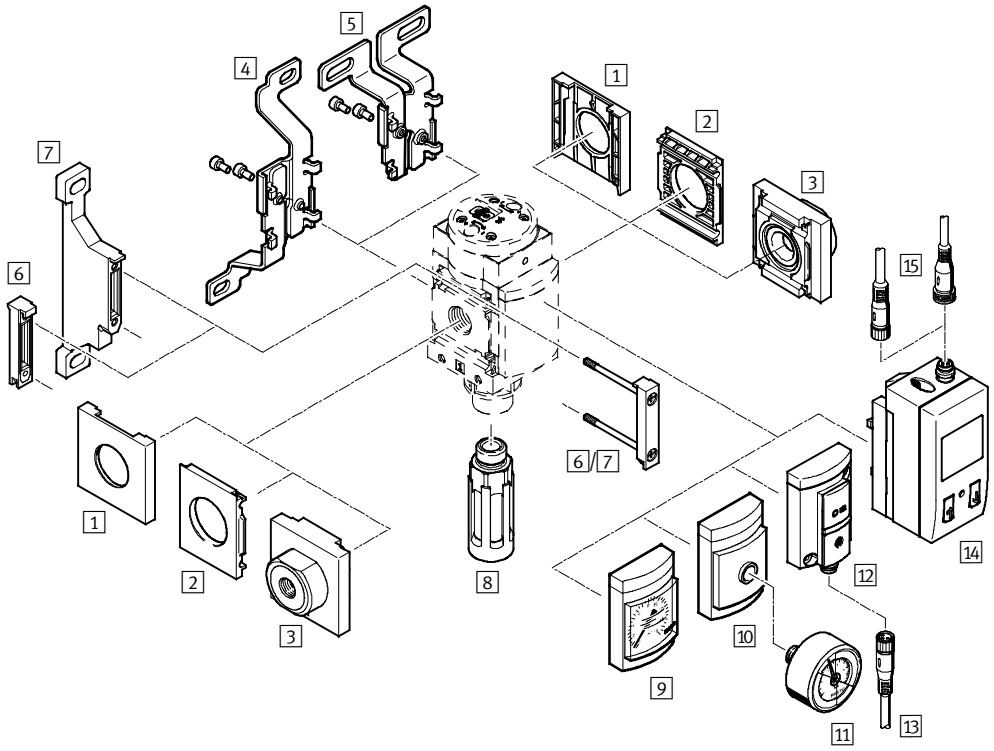

Note

Additional accessories:

- Module connector for combination with size MS4/MS6 or size MS9 ➔ Internet: amv, rmv, armv
- Adapter plate for mounting on profiles ➔ Internet: ipm-80, ipm-40-80, ipm-80-80

Supply voltage V24/10V24/V110/V230	Supply voltage 10V24P

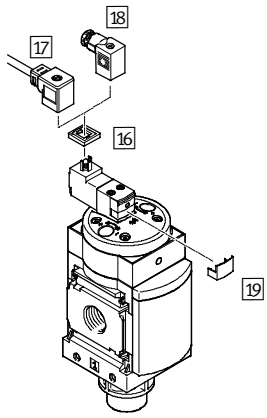

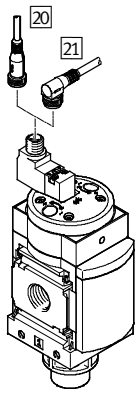

On-off valves MS4/MS6-EE, MS series

Peripherals overview

FESTO

Mounting attachments and accessories						
		Individual device		Combination		→ Page/Internet
		Without connecting plate	With connecting plate	Without connecting plate	With connecting plate	
1	Cover cap MS4/6-END	■	–	■	–	ms4-end, ms6-end
2	Mounting plate MS4/6-AEND	■1)	–	■1)	–	ms4-aend, ms6-aend
3	Connecting plate MS4/6-AG...	–	■1)	–	■1)	ms4-ag, ms6-ag
4	Mounting bracket MS4/6-WB	■	■	–	–	ms4-wb, ms6-wb
5	Mounting bracket MS4-WBM	■	■	–	–	ms4-wbm
6	Module connector MS4/6-MV	–	■	■	■	ms4-mv, ms6-mv
7	Mounting bracket MS4/6-WP	■	■	■	■	ms4-wp, ms6-wp
	Mounting bracket (not illustrated) MS4/6-WPB/WPE/WPM	■	■	■	■	ms4-wp, ms6-wp
8	Silencer U	■	■	■	■	107
9	MS pressure gauge AG/RG	■	■	■	■	28
10	Adapter plate for EN pressure gauge ⅛/¼ A8/A4	■	■	■	■	28
11	Pressure gauge MA	■	■	■	■	107
12	Pressure sensor without display AD7 ... AD10	■	■	■	■	28
13	Connecting cable NEBU-M8...-LE3	■	■	■	■	107
14	Pressure sensor with display AD1 ... AD4	■	■	■	■	28
15	Connecting cable NEBU-M8...-LE3/NEBU-M12...-LE4	■	■	■	■	107
16	Illuminating seal MEB-LD	■	■	■	■	106
17	Plug socket with cable KMEB	■	■	■	■	106
18	Plug socket MSSD-EB	■	■	■	■	106
19	Locking clip CPV18-HV	■	■	■	■	106
20	Connecting cable NEBU-M12G5	■	■	■	■	107
21	Connecting cable NEBU-M12W5	■	■	■	■	107

1) Module connector MS4/6-MV 6 or mounting bracket MS4/6-WP/WPB/WPE/WPM 7 is required for mounting.

New
Variant 10V24P

On-off valves MS4/MS6-EE, MS series

Type codes

MS	6	–	EE	–	½	–	V110	–	

Series	
MS	Standard service unit

Size	
4	Grid dimension 40 mm
6	Grid dimension 62 mm

Service function	
EE	Solenoid actuated on-off valve

Pneumatic connection	
MS4	
⅛	Female thread G⅛
¼	Female thread G¼
MS6	
¼	Female thread G¼
⅜	Female thread G⅜
½	Female thread G½

Supply voltage	
10V24	Supply voltage 24 V DC
V110	Supply voltage 110 V AC
V230	Supply voltage 230 V AC

Silencer	
	Without silencer
S	Silencer

Additional variants can be ordered using the modular system ➔ 28

- Connecting plates
- Supply voltage
- Pressure gauge/pressure gauge alternatives
- Alternative pressure gauge scale
- Type of mounting
- EU Certification
- Flow direction

New
Variant 10V24P

On-off valves MS4/MS6-EE, MS series

Technical data

FESTO

Function

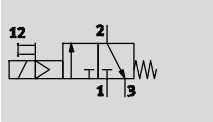

Flow rate
1,000 ... 7,000 l/min

Temperature range
–10 ... +60 °C

Operating pressure
4 ... 18 bar

- Solenoid actuated on-off valve for pressurising and venting pneumatic installations
- With solenoid coil without plug socket
- Three voltage ranges can be selected
- Ducted exhaust possible via a threaded connection with silencer
- Non-detenting and detenting manual override (variant 10V24: only non-detenting)
- Solenoid actuator can be repositioned by 180°
- Optional pressure sensor
- Optional device variant EX2 for use in potentially explosive areas in zones 2 and 22

General technical data						
Size		MS4		MS6		
Pneumatic connection 1, 2		G⅛	G¼	G¼	G⅜	G½
Pneumatic connection 3		G¼		G½		
Design		Piston spool valve				
Type of mounting		Via accessories				
		In-line installation				
Assembly position		Any				
Pressure indicator		Via pressure sensor for displaying output pressure via LCD display and electrical output				
		Via pressure sensor for displaying output pressure via operational status indicator and electrical output				
		Via pressure gauge for displaying output pressure				
		Via pressure gauge with red/green scale for displaying output pressure				
		G¼ prepared				
		G⅛ prepared		–		
Valve function		3/2-way valve, single solenoid, closed				
Exhaust function		Without flow control				
Type of reset		Mechanical spring				
Switching position display		Via accessories				
Pilot control mode		Direct				
Pilot air supply		Internal				
Direction of flow		Non-reversible				
C value	[l/(s*bar)]	4.5	9.5	11.0	22.0	29.0
b value		0.5	0.44	0.5	0.5	0.4

Note: This product conforms to ISO 1179-1 and to ISO 228-1

Electrical data		
Coil characteristics	V24	24 V DC: 1.5 W; perm. voltage fluctuations –25%/+10%
	10V24	24 V DC: 2.5 W; perm. voltage fluctuations ±10%
	10V24P	24 V DC: 1.8 W; perm. voltage fluctuations –15%/+10%
	V110	110 V AC: 50/60 Hz; pick-up power 3.0 W; holding power 2.4 W; perm. voltage fluctuations ±10%
	V230	230 V AC: 50/60 Hz; pick-up power 3.0 W; holding power 2.4 W; perm. voltage fluctuations –14%/+10%
Electrical connection	V24, 10V24, V110, V230	Plug, square design to EN 175301-803, type C
	10V24P	M12x1 to IEC 61076-2-101
Protection class for solenoid coil		IP65
Duty cycle [%]		100

On-off valves MS4/MS6-EE, MS series

Technical data

FESTO

Standard nominal flow rate qnN[1] [l/min]					
Size	MS4		MS6		
Pneumatic connection	G⅛	G¼	G¼	G⅜	G½
In main flow direction 1 → 2	1,000	2,000	2,600	5,500	7,000
In relief direction 2 → 3	1,600	1,600	7,000	6,200	5,500

1) Measured at p1 = 6 bar and p2 = 5 bar, Δp = 1 bar

Operating and environmental conditions							
Variant		Coil parameter V24, V110, V230		Coil parameter 10V24, 10V24P		Pressure sensor AD...	
Size		MS4	MS6	MS4	MS6	MS4	MS6
Operating pressure	[bar]	4 ... 14 (4 ... 10 with silencer S)	4 ... 18 (4 ... 10 with silencer S)	4 ... 10	4 ... 10	4 ... 10	4 ... 10
Operating medium		Compressed air in accordance with ISO 8573-1:2010 [7:4:4]					
		Inert gases					
Note on operating/pilot medium		Operation with lubricated medium possible (in which case lubricated operation will always be required)					
Ambient temperature	[°C]	−10 ... +60	−10 ... +60	−10 ... +50	−10 ... +50	0 ... +50	0 ... +50
Temperature of medium	[°C]	−10 ... +60	−10 ... +60	−10 ... +50	−10 ... +50	0 ... +50	0 ... +50
Corrosion resistance	CRC[1]	2					

1) Corrosion resistance class 2 according to Festo standard 940 070
Components requiring moderate corrosion resistance. Externally visible parts with primarily decorative surface requirements which are in direct contact with a normal industrial environment or media such as coolants or lubricating agents.

ATEX	
Variant	EX2
ATEX category gas	II 3G
Ex-ignition protection type gas	Ex nA II T4 X
ATEX category dust	II 3D
EX-ignition protection type dust	Ex tD A22 IP65 T105°C X
ATEX ambient temperature	−10 °C ≤ Ta ≤ +60 °C
ATEX certification	For zones 2 and 22
CE mark (see declaration of conformity)	To EU Explosion Protection Directive (ATEX)

Weights [g]		
Size	MS4	MS6
On-off valve	273	740
On-off valve with silencer S	289	816

Materials

Sectional view

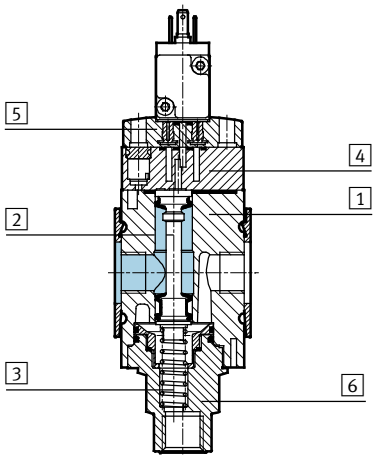

On-off valve		
1	Body	Die-cast aluminium
2	Piston spool	NBR/aluminium
3	Springs	High-alloy stainless steel
4	End cap	PA
5	Top plate	PA
6	Socket end connection	PA
–	Seals	NBR
Note on materials		RoHS-compliant
		Free of copper and PTFE (not with variants AG, 10V24, 10V24P or AD...)

On-off valves MS4/MS6-EE, MS series

Technical data

FESTO

Dimensions – Basic version Download CAD data ➔ **www.festo.com**

With female thread, with cover plate

Supply voltage V24/10V24/V110/V230

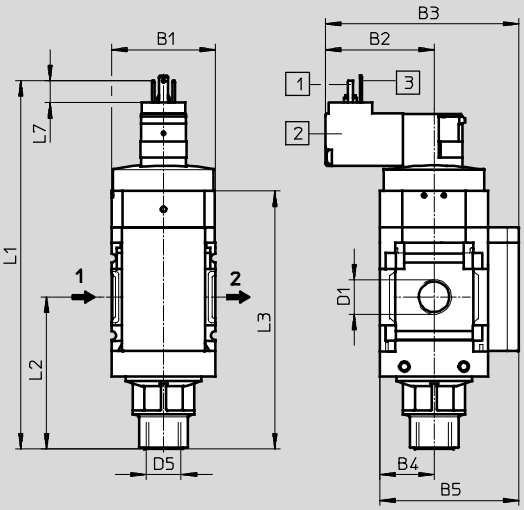

Supply voltage 10V24P

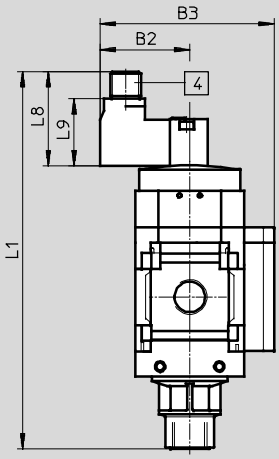

1 = Unused
2 = Unused
3 = com (–)
4 = Signal (+) solenoid 14

[1] Plug connection to EN 175301-803
[2] Solenoid actuator can be repositioned by 180°, i.e. solenoid points to the front
[3] PIN only with solenoid actuators 110 V and 230 V
[4] Electrical connection to IEC 61076-2-101, plug M12x1, 2 pin for NEBU-M12

➔ Flow direction

Supply voltage V24/V110/V230

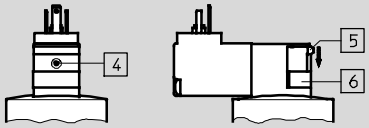

Note

For detenting manual override remove the grey cover plate [6] and press the slide [5] downwards.

Supply voltage 10V24/10V24P

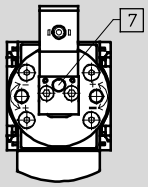

[4] Manual override, non-detenting (delivery status)
[5] Slide
[6] Cover plate
[7] Non-detenting and detenting manual override (variant 10V24: only non-detenting)

Type	B1	B2		B3		B4	B5	D1	D5
		V24/V110/V230	10V24/10V24P	V24/V110/V230	10V24/10V24P				
MS4-EE-⅛	40	42.2	34.9	75.2	67.9	21	54	G⅛	G¼
MS4-EE-¼								G¼	
MS6-EE-¼	62	52	44.7	97	89.7	31	76	G¼	G½
MS6-EE-⅜								G⅜	
MS6-EE-½								G½	

Type	L1			L2	L3	L7	L8	L9
	V24/V110/V230	10V24	10V24P					
MS4-EE-⅛	142.8	140.4	145.2	58.9	100	8.6	36.7	26.1
MS4-EE-¼								
MS6-EE-¼	185.6	183.2	188	84	143	8.6	36.7	26.1
MS6-EE-⅜								
MS6-EE-½								

Note: This product conforms to ISO 1179-1 and to ISO 228-1

On-off valves MS4/MS6-EE, MS series

Technical data

FESTO

Dimensions – Pressure gauge/pressure gauge alternatives Download CAD data ➔ **www.festo.com**

Integrated MS pressure gauge with standard scale AG or red-green scale RG, display unit [bar]

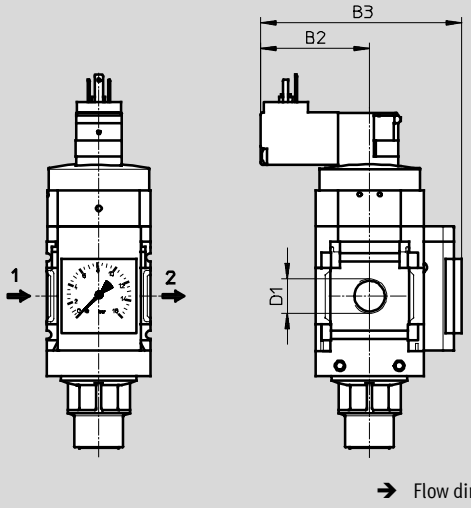

Adapter plate A8/A4 for EN pressure gauge 1/8/1/4, without pressure gauge

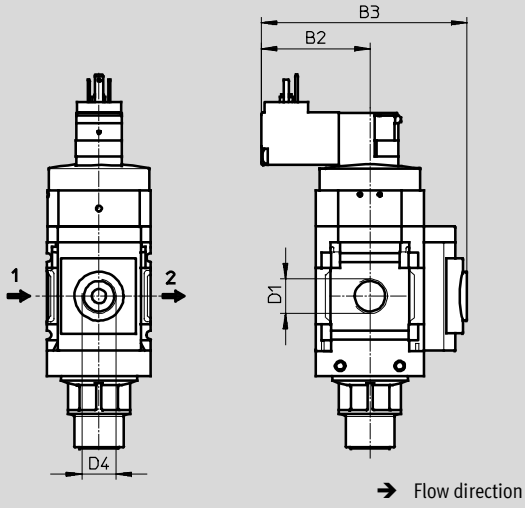

Type	B2	B2	B3	B3	D1	D4
	V24/V110/V230	10V24/10V24P	V24/V110/V230	10V24/10V24P		
MS4-EE-1/8-...-AG	42.2	34.9	86.2	78.9	G1/8	–
MS4-EE-1/4-...-AG					G1/4	
MS4-EE-1/8-...-RG	42.2	34.9	87.7	80.4	G1/8	–
MS4-EE-1/4-...-RG					G1/4	
MS4-EE-1/8-...-A8	42.2	34.9	79.7	72.4	G1/8	G1/8
MS4-EE-1/4-...-A8					G1/4	
MS4-EE-1/8-...-A4	42.2	34.9	79.7	72.4	G1/8	G1/4
MS4-EE-1/4-...-A4					G1/4	
MS6-EE-1/4-...-AG	52	44.7	106	98.7	G1/4	–
MS6-EE-3/8-...-AG					G3/8	
MS6-EE-1/2-...-AG					G1/2	
MS6-EE-1/4-...-RG	52	44.7	107.5	100.2	G1/4	–
MS6-EE-3/8-...-RG					G3/8	
MS6-EE-1/2-...-RG					G1/2	
MS6-EE-1/4-...-A4	52	44.7	99.6	92.3	G1/4	G1/4
MS6-EE-3/8-...-A4					G3/8	
MS6-EE-1/2-...-A4					G1/2	

Note: This product conforms to ISO 1179-1 and to ISO 228-1

On-off valves MS4/MS6-EE, MS series

Technical data

FESTO

Dimensions – Pressure gauge/pressure gauge alternatives Download CAD data ➔ **www.festo.com**

Pressure sensor with LCD display AD1 ... AD4 Technical data ➔ Internet: sde1

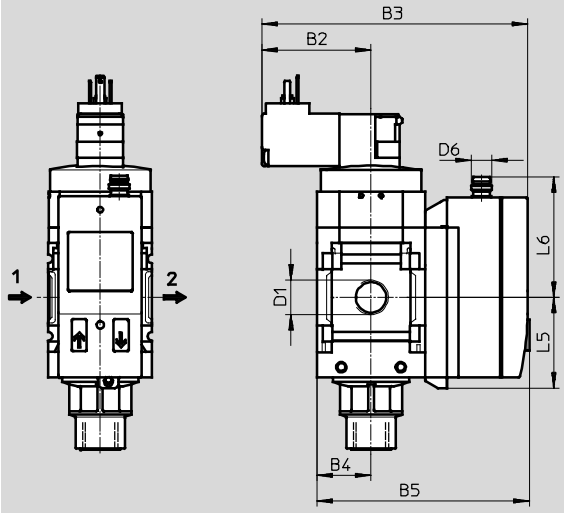

➔ Flow direction

Variant AD1:
SDE1-D10-G2-MS-L-P1-M8 with 3-pin plug M8x1, 1 switching output PNP

Variant AD2:
SDE1-D10-G2-MS-L-N1-M8 with 3-pin plug M8x1, 1 switching output NPN

Variant AD3:
SDE1-D10-G2-MS-L-PI-M12 with 4-pin plug M12x1, 1 switching output PNP and 4 ... 20 mA analogue

Variant AD4:
SDE1-D10-G2-MS-L-NI-M12 with 4-pin plug M12x1, 1 switching output NPN and 4 ... 20 mA analogue

Type	B2		B3		B4	B5	D1	D6	L5	L6
	V24/ V110/ V230	10V24/ 10V24P	V24/ V110/ V230	10V24/ 10V24P						
MS4-EE-⅛-...-AD1/AD2	42.2	34.9	103.8	96.5	21	82.6	G⅛	M8x1	35.1	46.7
MS4-EE-¼-...-AD1/AD2							G¼			
MS4-EE-⅛-...-AD3/AD4	42.2	34.9	103.8	96.5	21	82.6	G⅛	M12x1	35.1	55.8
MS4-EE-¼-...-AD3/AD4							G¼			
MS6-EE-¼-...-AD1/AD2	52	44.7	124	116.7	31	103	G¼	M8x1	35.1	46.7
MS6-EE-⅜-...-AD1/AD2							G⅜			
MS6-EE-½-...-AD1/AD2							G½			
MS6-EE-¼-...-AD3/AD4	52	44.7	124	116.7	31	103	G¼	M12x1	35.1	55.8
MS6-EE-⅜-...-AD3/AD4							G⅜			
MS6-EE-½-...-AD3/AD4							G½			

Note: This product conforms to ISO 1179-1 and to ISO 228-1

On-off valves MS4/MS6-EE, MS series

Technical data

FESTO

Dimensions – Pressure gauge/pressure gauge alternatives Download CAD data ➔ **www.festo.com**

Pressure sensor with operational status indicator AD7 ... AD10 Technical data ➔ Internet: sde5

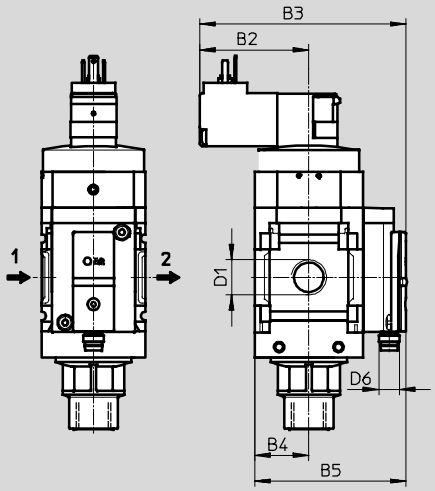

➔ Flow direction

Variant AD7:
SDE5-D10-O-...-P-M8 with 3-pin plug M8x1, threshold value comparator, 1 switching output PNP, N/O contact

Variant AD8:
SDE5-D10-C-...-P-M8 with 3-pin plug M8x1, threshold value comparator, 1 switching output PNP, N/C contact

Variant AD9:
SDE5-D10-O3-...-P-M8 with 3-pin plug M8x1, window comparator, 1 switching output PNP, N/O contact

Variant AD10:
SDE5-D10-C3-...-P-M8 with 3-pin plug M8x1, window comparator, 1 switching output PNP, N/C contact

Type	B2		B3		B4	B5	D1	D6
	V24/ V110/ V230	10V24/ 10V24P	V24/ V110/ V230	10V24/ 10V24P				
MS4-EE-⅛-...-AD7/AD8/AD9/AD10	42.2	34.9	80.3	73	21	59.1	G⅛	M8x1
MS4-EE-¼-...-AD7/AD8/AD9/AD10							G¼	
MS6-EE-¼-...-AD7/AD8/AD9/AD10	52	44.7	100.2	92.9	31	79	G¼	M8x1
MS6-EE-⅜-...-AD7/AD8/AD9/AD10							G⅜	
MS6-EE-½-...-AD7/AD8/AD9/AD10							G½	

Note: This product conforms to ISO 1179-1 and to ISO 228-1

On-off valves MS4/MS6-EE, MS series

Technical data

FESTO

Dimensions – Silencer Download CAD data ➔ **www.festo.com**

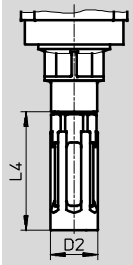

Type	D2	L4
MS4-EE-...-S	19.5	48.5
MS6-EE-...-S	28	106

Ordering data

Size	Connection	Without silencer		With silencer	
		Part No.	Type	Part No.	Type
Supply voltage 24 V DC					
MS4	G1/8	**542580**	**MS4-EE-1/8-10V24**	**542600**	**MS4-EE-1/8-10V24-S**
	G1/4	**542578**	**MS4-EE-1/4-10V24**	**542598**	**MS4-EE-1/4-10V24-S**
MS6	G1/4	**542584**	**MS6-EE-1/4-10V24**	**542604**	**MS6-EE-1/4-10V24-S**
	G3/8	**542586**	**MS6-EE-3/8-10V24**	**542606**	**MS6-EE-3/8-10V24-S**
	G1/2	**542582**	**MS6-EE-1/2-10V24**	**542602**	**MS6-EE-1/2-10V24-S**
Supply voltage 110 V AC					
MS4	G1/8	**529541**	**MS4-EE-1/8-V110**[1)]	**538725**	**MS4-EE-1/8-V110-S**[1)]
	G1/4	**529535**	**MS4-EE-1/4-V110**[1)]	**538719**	**MS4-EE-1/4-V110-S**[1)]
MS6	G1/4	**529829**	**MS6-EE-1/4-V110**[1)]	**538737**	**MS6-EE-1/4-V110-S**[1)]
	G3/8	**529835**	**MS6-EE-3/8-V110**[1)]	**538743**	**MS6-EE-3/8-V110-S**[1)]
	G1/2	**529823**	**MS6-EE-1/2-V110**[1)]	**538731**	**MS6-EE-1/2-V110-S**[1)]
Supply voltage 230 V AC					
MS4	G1/8	**529543**	**MS4-EE-1/8-V230**[1)]	**538727**	**MS4-EE-1/8-V230-S**[1)]
	G1/4	**529537**	**MS4-EE-1/4-V230**[1)]	**538721**	**MS4-EE-1/4-V230-S**[1)]
MS6	G1/4	**529831**	**MS6-EE-1/4-V230**[1)]	**538739**	**MS6-EE-1/4-V230-S**[1)]
	G3/8	**529837**	**MS6-EE-3/8-V230**[1)]	**538745**	**MS6-EE-3/8-V230-S**[1)]
	G1/2	**529825**	**MS6-EE-1/2-V230**[1)]	**538733**	**MS6-EE-1/2-V230-S**[1)]

1) Free of copper and PTFE

New
Variant 10V24P

On-off valves MS4/MS6-EE, MS series

Ordering data – Modular products

FESTO

M **Mandatory data**

Module No.	Series	Size		Function		Pneumatic connection		Supply voltage	
527709 527682	MS	4 6		EE		1/8, 1/4, 3/8, 1/2, AGA, AGB, AGC, AGD, AGE		V24, 10V24, 10V24P, V110, V230	
Order example									
527709	**MS**	**4**	–	**EE**	–	**AGB**	–	**V24**	–

Ordering table

Grid dimension [mm]		40	62	Condi-tions	Code	Enter code
M	Module No.	**527709**	**527682**			
	Series	Standard			**MS**	MS
	Size	4	6		**...**	
	Function	On-off valve, electrical			**-EE**	-EE
	Pneumatic connection	Female thread G1/8	–	5	**-1/8**	
		Female thread G1/4	Female thread G1/4	5	**-1/4**	
		–	Female thread G3/8	5	**-3/8**	
		–	Female thread G1/2	5	**-1/2**	
		Connecting plate G1/8	–		**-AGA**	
		Connecting plate G1/4	Connecting plate G1/4		**-AGB**	
		Connecting plate G3/8	Connecting plate G3/8		**-AGC**	
		–	Connecting plate G1/2		**-AGD**	
		–	Connecting plate G3/4		**-AGE**	
	Supply voltage	24 V DC (pin allocation to EN 175301) 4 ... 14 bar	4 ... 18 bar		**-V24**	
		24 V DC (pin allocation to EN 175301) 4 ... 10 bar	4 ... 10 bar	1 5	**-10V24**	
		24 V DC, M12 to IEC 61076-2-101 4 ... 10 bar	4 ... 10 bar	1 5	**-10V24P**	
		110 V AC (pin allocation to EN 175301) 4 ... 14 bar	4 ... 18 bar	5	**-V110**	
		230 V AC (pin allocation to EN 175301) 4 ... 14 bar	4 ... 18 bar	5	**-V230**	

1 **10V24, 10V24P**
Max. operating pressure 10 bar

Transfer order code

	MS		–	**EE**	–		–		

On-off valves MS4/MS6-EE, MS series

FESTO

Ordering data – Modular products

➔ 0 **Options**

	Silencer		Pressure gauge/ pressure gauge alternatives		Alternative pressure gauge scale		Type of mounting		EU certification		Flow direction
	S		AG, A8, A4, RG, AD1, AD2, AD3, AD4, AD7, AD8, AD9, AD10		PSI, MPA		WP, WPM, WB, WBM		EX2		Z
–	**S**	–	**AG**	–	**PSI**	–	**WP**	–		–	**Z**

Ordering table

Grid dimension [mm]		40	62	Conditions	Code	Enter code
0	Silencer	Silencer			**-S**	
	Pressure gauge/pressure gauge alternatives	MS pressure gauge (with adapter plate)	MS pressure gauge		**-AG**	
		Adapter plate for EN pressure gauge 1/8, without pressure gauge	–		**-A8**	
		Adapter plate for EN pressure gauge 1/4, without pressure gauge			**-A4**	
		Integrated pressure gauge, red-green scale			**-RG**	
		Pressure sensor with LCD display, plug M8, 1 switching output PNP, 3-pin		2 5	**-AD1**	
		Pressure sensor with LCD display, plug M8, 1 switching output NPN, 3-pin		2 5	**-AD2**	
		Pressure sensor with LCD display, plug M12, 1 switching output PNP, 4-pin, analogue output 4 ... 20 mA		2 5	**-AD3**	
		Pressure sensor with LCD display, plug M12, 1 switching output NPN, 4-pin, analogue output 4 ... 20 mA		2 5	**-AD4**	
		Pressure sensor with operational status indicator, plug M8, threshold value comparator, PNP, N/O contact		2 5	**-AD7**	
		Pressure sensor with operational status indicator, plug M8, threshold value comparator, PNP, N/C contact		2 5	**-AD8**	
		Pressure sensor with operational status indicator, plug M8, window comparator, PNP, N/O contact		2 5	**-AD9**	
		Pressure sensor with operational status indicator, plug M8, window comparator, PNP, N/C contact		2 5	**-AD10**	
	Alternative pressure gauge scale	psi		3	**-PSI**	
		MPa		3	**-MPA**	
	Type of mounting	Mounting bracket		4	**-WP**	
		Mounting bracket		4 5	**-WPM**	
		Mounting bracket			**-WB**	
		Mounting bracket	–		**-WBM**	
	EU certification	II 3GD to EU Directive 94/9/EG			**-EX2**	
	Flow direction	Flow direction from right to left			**-Z**	

2 **AD1 ... AD4, AD7 ... AD10** Measuring range max. 10 bar

3 **PSI, MPA** Only in combination with pressure gauge AG or RG

4 **WP, WPM** Only with connecting plate AGA, AGB, AGC, AGD or AGE

5 **1/8, 1/4, 3/8, 1/2, 10V24, 10V24P, V110, V230, AD1 ... AD4, AD7 ... AD10, WPM** Not with EU EX2 certification

Transfer order code

–		–		–		–		–		–	

Soft-start valves MS4/MS6-DL, MS series

Peripherals overview

Soft-start valve MS4/MS6-DL

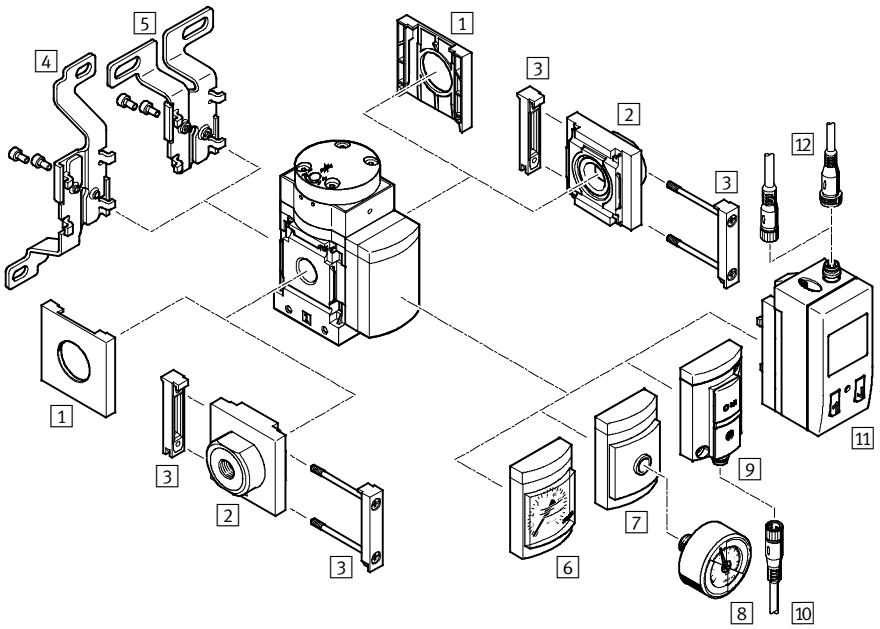

- Note

Additional accessories:

– Module connector for combination with size MS4/MS6 or size MS9 ➔ Internet: amv, rmv, armv
– Adapter plate for mounting on profiles ➔ Internet: ipm-80, ipm-40-80, ipm-80-80

Mounting attachments and accessories

		Individual device		Combination		➔ Page/Internet
		Without connecting plate	With connecting plate	Without connecting plate	With connecting plate	
1	Cover cap MS4/6-END	■	–	■	–	ms4-end, ms6-end
2	Connecting plate MS4/6-AG...	–	■	–	■	ms4-ag, ms6-ag
3	Module connector MS4/6-MV	–	■	■	■	ms4-mv, ms6-mv
4	Mounting bracket MS4/6-WB	■	■	–	–	ms4-wb, ms6-wb
5	Mounting bracket MS4-WBM	■	■	–	–	ms4-wbm
6	MS pressure gauge AG/RG	■	■	■	■	36
7	Adapter plate for EN pressure gauge ⅛/¼ A8/A4	■	■	■	■	36
8	Pressure gauge MA	■	■	■	■	107
9	Pressure sensor without display AD7 ... AD10	■	■	■	■	36
10	Connecting cable NEBU-M8...-LE3	■	■	■	■	107
11	Pressure sensor with display AD1 ... AD4	■	■	■	■	36
12	Connecting cable NEBU-M8...-LE3/NEBU-M12...-LE4	■	■	■	■	107
–	Mounting bracket MS4/6-WP/WPB/WPE/WPM	–	■	■	■	ms4-wp, ms6-wp

Soft-start valves MS4/MS6-DL, MS series

Type codes

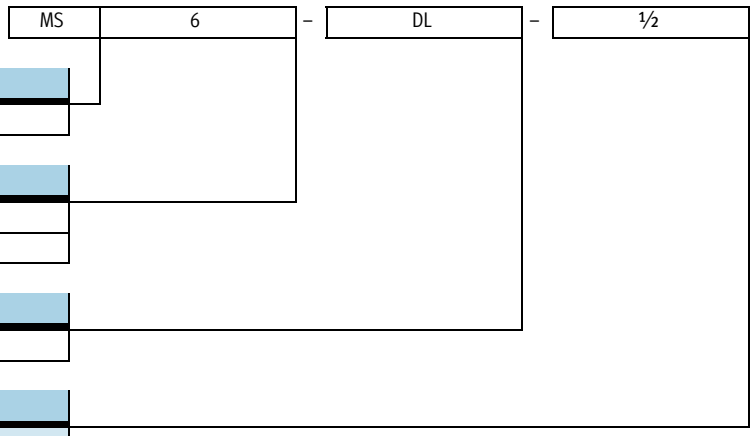

Series	
MS	Standard service unit

Size	
4	Grid dimension 40 mm
6	Grid dimension 62 mm

Service function	
DL	Pneumatically actuated soft-start valve

Pneumatic connection	
MS4	
⅛	Female thread G⅛
¼	Female thread G¼
MS6	
¼	Female thread G¼
⅜	Female thread G⅜
½	Female thread G½

Additional variants can be ordered using the modular system ➔ 36

- Connecting plates
- Pressure gauge/pressure gauge alternatives
- Alternative pressure gauge scale
- Type of mounting
- Flow direction

Soft-start valves MS4/MS6-DL, MS series

Technical data

Function

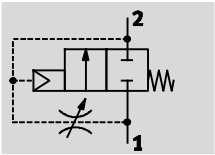

Flow rate
1,000 ... 6,450 l/min

Temperature range
–10 ... +60 °C

Operating pressure
4 ... 18 bar

The duration of the pressure build-up is adjusted using the restrictor attached to the valve cap.

The output pressure p2 rises slowly in accordance with the restrictor setting. The main seat opens when the switch-through pressure is reached.

- Pneumatically actuated soft-start valve for slowly pressurising and venting pneumatic installations (for use with on-off valves EM1 and EE)
- The drives advance slowly and reliably into the initial position
- Sudden and erratic movements are avoided
- Pressure switching approx. 50% of operating pressure
- Adjustable switching time delay
- Optional pressure sensor

General technical data					
Size	MS4		MS6		
Pneumatic connection 1, 2	G⅛	G¼	G¼	G⅜	G½
Design	Piston poppet valve				
Type of mounting	Via accessories				
	In-line installation				
Assembly position	Any				
Pressure indicator	Via pressure sensor for displaying output pressure via LCD display and electrical output				
	Via pressure sensor for displaying output pressure via operational status indicator and electrical output				
	Via pressure gauge for displaying output pressure				
	Via pressure gauge with red/green scale for displaying output pressure				
	G¼ prepared				
	G⅛ prepared		–		
Valve function	2/2-way valve				
Exhaust function	Flow control				
Type of reset	Mechanical spring				
Pilot control mode	Direct				
Pilot air supply	External				
Direction of flow	Non-reversible				
C value [l/(s*bar)]	4.6	9.6	11.22	21.05	28.97
b value	0.5	0.45	0.54	0.48	0.39

Note: This product conforms to ISO 1179-1 and to ISO 228-1

Standard nominal flow rate qnN[1] [l/min]					
Size	MS4		MS6		
Pneumatic connection	G⅛	G¼	G¼	G⅜	G½
In main flow direction 1 → 2	1,000	2,000	2,800	5,050	6,450
In relief direction 2 → 1	1,000	2,000	2,800	5,050	6,400

1) Measured at p1 = 6 bar and p2 = 5 bar, Δp = 1 bar

Operating and environmental conditions					
Variant		Standard		Pressure sensor AD...	
Size		MS4	MS6	MS4	MS6
Operating pressure	[bar]	4 ... 14	4 ... 18	4 ... 10	4 ... 10
Operating medium		Compressed air in accordance with ISO 8573-1:2010 [7:4:4]			
		Inert gases			
Note on operating/pilot medium		Operation with lubricated medium possible (in which case lubricated operation will always be required)			
Ambient temperature	[°C]	–10 ... +60	–10 ... +60	0 ... +50	0 ... +50
Temperature of medium	[°C]	–10 ... +60	–10 ... +60	0 ... +50	0 ... +50
Corrosion resistance	CRC[1)]	2			

1) Corrosion resistance class 2 according to Festo standard 940 070
Components requiring moderate corrosion resistance. Externally visible parts with primarily decorative surface requirements which are in direct contact with a normal industrial environment or media such as coolants or lubricating agents.

Weights [g]		
Size	MS4	MS6
Soft-start valve	213	650

Materials

Sectional view

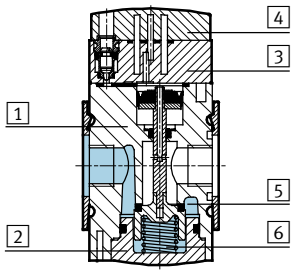

Soft-start valve		
1	Body	Die-cast aluminium
2	Base	PET
3	End cap	PA
4	Top plate	PA
5	Seat	Aluminium
6	Springs	Spring steel
–	Seals	NBR
Note on materials		RoHS-compliant
		Free of copper and PTFE (not with variants AG or AD...)

Switching point – Pressure p as a function of time t

MS4

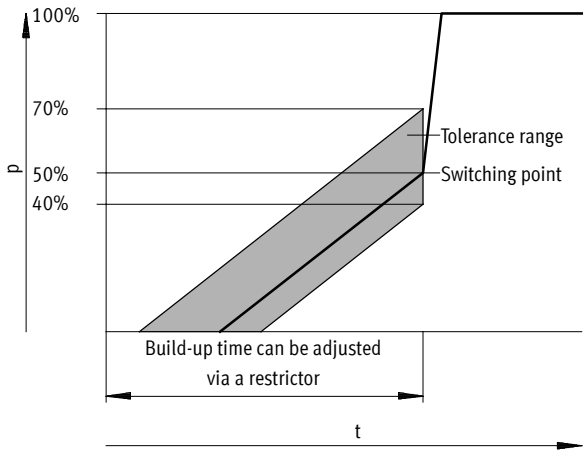

MS6

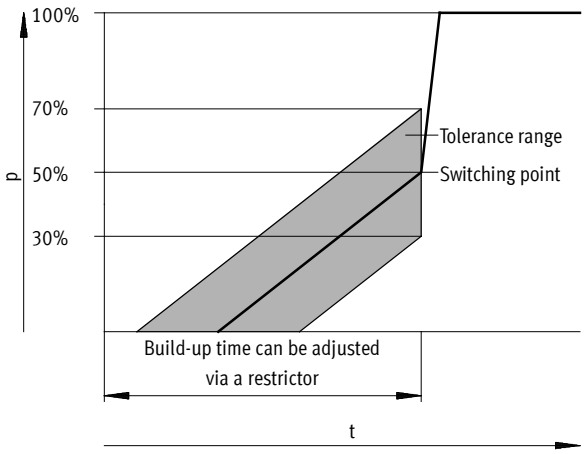

Note

The tolerance specification +20%/–10% of the switching point refers to the operating pressure p1.

Example: at an operating pressure of 4 bar a switching point of 1.6 bar to 2.8 bar is permitted.

Note

The tolerance specification +20%/–20% of the switching point refers to the operating pressure p1.

Example: at an operating pressure of 4 bar a switching point of 1.2 bar to 2.8 bar is permitted.

Dimensions – Basic version Download CAD data ➔ **www.festo.com**

With female thread, with cover plate

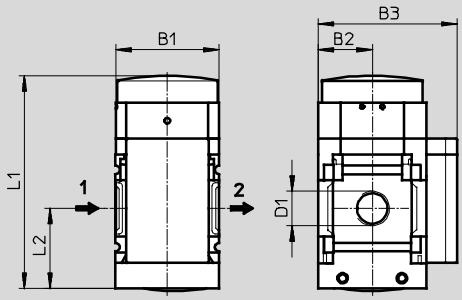

➔ Flow direction

Type	B1	B2	B3	D1	L1	L2
MS4-DL-⅛	40	21	54	G⅛	82.7	31
MS4-DL-¼				G¼		
MS6-DL-¼	62	31	76	G¼	116	45
MS6-DL-⅜				G⅜		
MS6-DL-½				G½		

Note: This product conforms to ISO 1179-1 and to ISO 228-1

Dimensions – Pressure gauge/pressure gauge alternatives Download CAD data ➔ **www.festo.com**

Integrated MS pressure gauge with standard scale AG or red-green scale RG, display unit [bar]

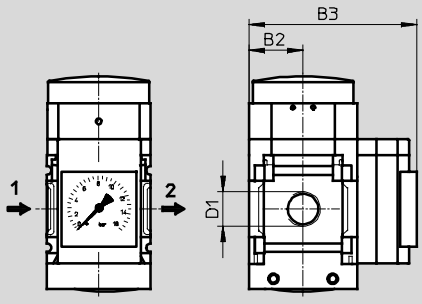

➔ Flow direction

Adapter plate A8/A4 for EN pressure gauge ⅛/¼, without pressure gauge

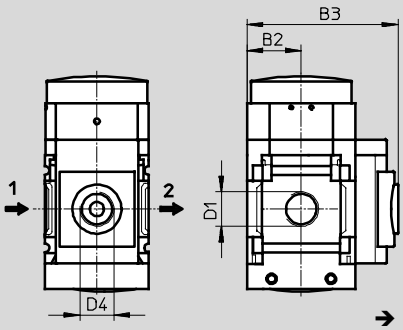

➔ Flow direction

Type	B2	B3	D1	D4
MS4-DL-⅛-...-AG	21	65	G⅛	–
MS4-DL-¼-...-AG			G¼	
MS4-DL-⅛-...-RG	21	66.5	G⅛	–
MS4-DL-¼-...-RG			G¼	
MS4-DL-⅛-...-A8	21	58.5	G⅛	G⅛
MS4-DL-¼-...-A8			G¼	
MS4-DL-⅛-...-A4	21	58.5	G⅛	G¼
MS4-DL-¼-...-A4			G¼	
MS6-DL-¼-...-AG	31	85	G¼	–
MS6-DL-⅜-...-AG			G⅜	
MS6-DL-½-...-AG			G½	
MS6-DL-¼-...-RG	31	86.5	G¼	–
MS6-DL-⅜-...-RG			G⅜	
MS6-DL-½-...-RG			G½	
MS6-DL-¼-...-A4	31	78.5	G¼	G¼
MS6-DL-⅜-...-A4			G⅜	
MS6-DL-½-...-A4			G½	

Note: This product conforms to ISO 1179-1 and to ISO 228-1

Dimensions – Pressure gauge/pressure gauge alternatives Download CAD data ➔ **www.festo.com**

Pressure sensor with LCD display AD1 ... AD4 Technical data ➔ Internet: sde1

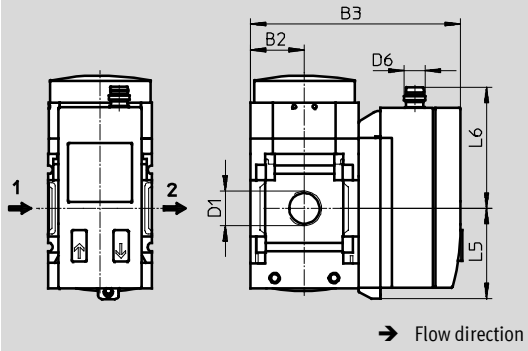

➔ Flow direction

Variant AD1:
SDE1-D10-G2-MS-L-P1-M8 with 3-pin plug M8x1, 1 switching output PNP

Variant AD2:
SDE1-D10-G2-MS-L-N1-M8 with 3-pin plug M8x1, 1 switching output NPN

Variant AD3:
SDE1-D10-G2-MS-L-PI-M12 with 4-pin plug M12x1, 1 switching output PNP and 4 ... 20 mA analogue

Variant AD4:
SDE1-D10-G2-MS-L-NI-M12 with 4-pin plug M12x1, 1 switching output NPN and 4 ... 20 mA analogue

Pressure sensor with operational status indicator AD7 ... AD10 Technical data ➔ Internet: sde5

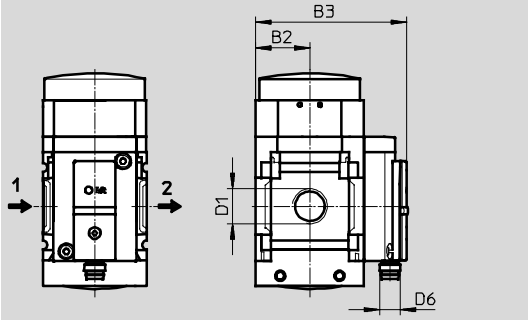

➔ Flow direction

Variant AD7:
SDE5-D10-O-...-P-M8 with 3-pin plug M8x1, threshold value comparator, 1 switching output PNP, N/O contact

Variant AD8:
SDE5-D10-C-...-P-M8 with 3-pin plug M8x1, threshold value comparator, 1 switching output PNP, N/C contact

Variant AD9:
SDE5-D10-O3-...-P-M8 with 3-pin plug M8x1, window comparator, 1 switching output PNP, N/O contact

Variant AD10:
SDE5-D10-C3-...-P-M8 with 3-pin plug M8x1, window comparator, 1 switching output PNP, N/C contact

Type	B2	B3	D1	D6	L5	L6
MS4-DL-⅛-...-AD1/AD2	21	82.6	G⅛	M8x1	35.1	46.7
MS4-DL-¼-...-AD1/AD2			G¼			
MS4-DL-⅛-...-AD3/AD4	21	82.6	G⅛	M12x1	35.1	55.8
MS4-DL-¼-...-AD3/AD4			G¼			
MS4-DL-⅛-...-AD7/AD8/AD9/AD10	21	59.1	G⅛	M8x1	–	–
MS4-DL-¼-...-AD7/AD8/AD9/AD10			G¼			
MS6-DL-¼-...-AD1/AD2	31	103	G¼	M8x1	35.1	46.7
MS6-DL-⅜-...-AD1/AD2			G⅜			
MS6-DL-½-...-AD1/AD2			G½			
MS6-DL-¼-...-AD3/AD4	31	103	G¼	M12x1	35.1	55.8
MS6-DL-⅜-...-AD3/AD4			G⅜			
MS6-DL-½-...-AD3/AD4			G½			
MS6-DL-¼-...-AD7/AD8/AD9/AD10	31	79	G¼	M8x1	–	–
MS6-DL-⅜-...-AD7/AD8/AD9/AD10			G⅜			
MS6-DL-½-...-AD7/AD8/AD9/AD10			G½			

Note: This product conforms to ISO 1179-1 and to ISO 228-1

Ordering data

Size	Connection	Part No.	Type
MS4	G⅛	**529533**	**MS4-DL-⅛**[1)]
	G¼	**529531**	**MS4-DL-¼**[1)]
MS6	G¼	**529819**	**MS6-DL-¼**[1)]
	G⅜	**529821**	**MS6-DL-⅜**[1)]
	G½	**529817**	**MS6-DL-½**[1)]

1) Free of copper and PTFE

Soft-start valves MS4/MS6-DL, MS series

Ordering data – Modular products

FESTO

M Mandatory data

Module No.	Series	Size		Function		Pneumatic connection
527711 527684	MS	4 6		DL		1/8, 1/4, 3/8, 1/2, AGA, AGB, AGC, AGD, AGE
Order example						
527711	**MS**	**4**	**–**	**DL**	**–**	**AGA**

Ordering table

Grid dimension [mm]	40	62	Condi-tions	Code	Enter code
M Module No.	**527711**	**527684**			
Series	Standard			**MS**	MS
Size	4	6		**...**	
Function	Soft-start valve, pneumatic			**-DL**	-DL
Pneumatic connection	Female thread G1/8	–		**-1/8**	
	Female thread G1/4	Female thread G1/4		**-1/4**	
	–	Female thread G3/8		**-3/8**	
	–	Female thread G1/2		**-1/2**	
	Connecting plate G1/8	–		**-AGA**	
	Connecting plate G1/4	Connecting plate G1/4		**-AGB**	
	Connecting plate G3/8	Connecting plate G3/8		**-AGC**	
	–	Connecting plate G1/2		**-AGD**	
↓	–	Connecting plate G3/4		**-AGE**	

Transfer order code

	MS		**–**	**DL**	**–**	

➔ 0 **Options**

Pressure gauge/pressure gauge alternatives	**Alternative pressure gauge scale**	**Type of mounting**	**Flow direction**
AG, A8, A4, RG, AD1 ... AD4, AD7 ... AD10	PSI, MPA	WP, WPM, WB, WBM	Z
– **AG**	– **PSI**	– **WB**	– **Z**

Ordering table

Grid dimension [mm]		40	62	Conditions	Code		Enter code
0	Pressure gauge/pressure gauge alternatives	MS pressure gauge, bar (with adapter plate)	MS pressure gauge, bar		**-AG**		
		Adapter plate for EN pressure gauge ⅛, without pressure gauge	–		**-A8**		
		Adapter plate for EN pressure gauge ¼, without pressure gauge			**-A4**		
		Integrated pressure gauge, red-green scale			**-RG**		
		Pressure sensor with LCD display, plug M8, 1 switching output PNP, 3-pin		1	**-AD1**		
		Pressure sensor with LCD display, plug M8, 1 switching output NPN, 3-pin		1	**-AD2**		
		Pressure sensor with LCD display, plug M12, 1 switching output PNP, 4-pin, analogue output 4 ... 20 mA		1	**-AD3**		
		Pressure sensor with LCD display, plug M12, 1 switching output NPN, 4-pin, analogue output 4 ... 20 mA		1	**-AD4**		
		Pressure sensor with operational status indicator, plug M8, threshold value comparator, PNP, N/O contact		1	**-AD7**		
		Pressure sensor with operational status indicator, plug M8, threshold value comparator, PNP, N/C contact		1	**-AD8**		
		Pressure sensor with operational status indicator, plug M8, window comparator, PNP, N/O contact		1	**-AD9**		
		Pressure sensor with operational status indicator, plug M8, window comparator, PNP, N/C contact		1	**-AD10**		
	Alternative pressure gauge scale	psi		2	**-PSI**		
		MPa		2	**-MPA**		
	Type of mounting	Mounting bracket		3	**-WP**		
		Mounting bracket		3	**-WPM**		
		Mounting bracket			**-WB**		
		Mounting bracket	–		**-WBM**		
	Flow direction	Flow direction from right to left			**-Z**		

1 **AD1 ... AD4, AD7 ... AD10** Measuring range max. 10 bar

2 **PSI, MPA** Only with pressure gauge AG or RG

3 **WP, WPM** Only with connecting plate AGA, AGB, AGC, AGD or AGE

Transfer order code

– [ ] – [ ] – [ ] – [ ]

New
Variant 10V24P

Soft-start valves MS4/MS6-DE, MS series

Peripherals overview

FESTO

Soft-start valve MS4/MS6-DE

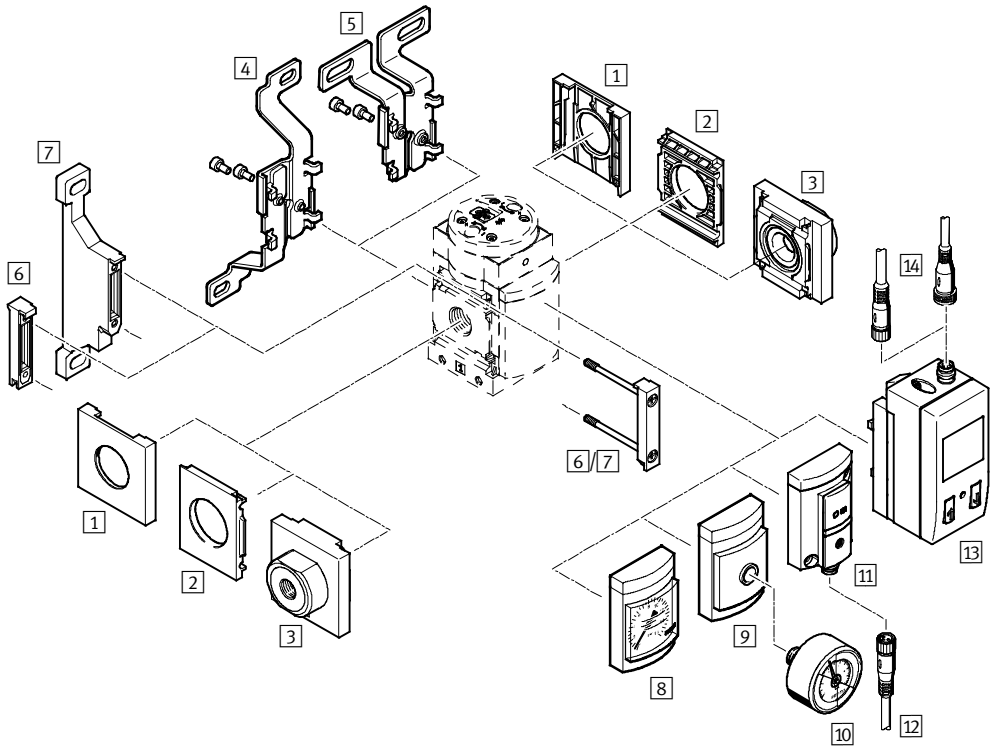

Note

Additional accessories:

- Module connector for combination with size MS4/MS6 or size MS9 ➔ Internet: amv, rmv, armv
- Adapter plate for mounting on profiles ➔ Internet: ipm-80, ipm-40-80, ipm-80-80

Supply voltage V24/10V24/V110/V230	Supply voltage 10V24P

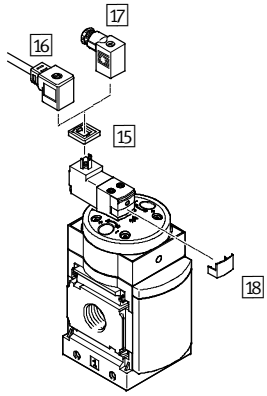

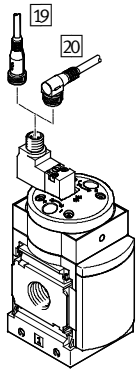

Soft-start valves MS4/MS6-DE, MS series

Peripherals overview

FESTO

Mounting attachments and accessories						
		Individual device		Combination		→ Page/Internet
		Without connecting plate	With connecting plate	Without connecting plate	With connecting plate	
1	Cover cap MS4/6-END	■	–	■	–	ms4-end, ms6-end
2	Mounting plate MS4/6-AEND	■1)	–	■1)	–	ms4-aend, ms6-aend
3	Connecting plate MS4/6-AG...	–	■1)	–	■1)	ms4-ag, ms6-ag
4	Mounting bracket MS4/6-WB	■	■	–	–	ms4-wb, ms6-wb
5	Mounting bracket MS4-WBM	■	■	–	–	ms4-wbm
6	Module connector MS4/6-MV	–	■	■	■	ms4-mv, ms6-mv
7	Mounting bracket MS4/6-WP	■	■	■	■	ms4-wp, ms6-wp
	Mounting bracket (not illustrated) MS4/6-WPB/WPE/WPM	■	■	■	■	ms4-wp, ms6-wp
8	MS pressure gauge AG/RG	■	■	■	■	48
9	Adapter plate for EN pressure gauge ⅛/¼ A8/A4	■	■	■	■	48
10	Pressure gauge MA	■	■	■	■	107
11	Pressure sensor without display AD7 ... AD10	■	■	■	■	48
12	Connecting cable NEBU-M8...-LE3	■	■	■	■	107
13	Pressure sensor with display AD1 ... AD4	■	■	■	■	48
14	Connecting cable NEBU-M8...-LE3/NEBU-M12...-LE4	■	■	■	■	107
15	Illuminating seal MEB-LD	■	■	■	■	106
16	Plug socket with cable KMEB	■	■	■	■	106
17	Plug socket MSSD-EB	■	■	■	■	106
18	Locking clip CPV18-HV	■	■	■	■	106
19	Connecting cable NEBU-M12G5	■	■	■	■	107
20	Connecting cable NEBU-M12W5	■	■	■	■	107

1) Module connector MS4/6-MV 6 or mounting bracket MS4/6-WP/WPB/WPE/WPM 7 is required for mounting.

New
Variant 10V24P

Soft-start valves MS4/MS6-DE, MS series

FESTO

Type codes

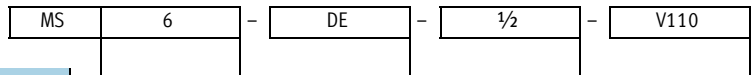

Series	
MS	Standard service unit

Size	
4	Grid dimension 40 mm
6	Grid dimension 62 mm

Service function	
DE	Solenoid actuated soft-start valve

Pneumatic connection	
MS4	
⅛	Female thread G⅛
¼	Female thread G¼
MS6	
¼	Female thread G¼
⅜	Female thread G⅜
½	Female thread G½

Supply voltage	
10V24	Supply voltage 24 V DC
V110	Supply voltage 110 V AC
V230	Supply voltage 230 V AC

Additional variants can be ordered using the modular system ➔ 48

- Connecting plates
- Supply voltage
- Pressure gauge/pressure gauge alternatives
- Alternative pressure gauge scale
- Type of mounting
- EU Certification
- Flow direction

Soft-start valves MS4/MS6-DE, MS series

Technical data

FESTO

Function

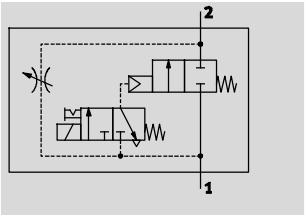

Flow rate
1,000 ... 6,450 l/min

Temperature range
–10 ... +60 °C

Operating pressure
4 ... 18 bar

The duration of the pressure build-up is adjusted using the restrictor attached to the valve cap.
The output pressure p2 rises slowly in accordance with the restrictor setting. Only the air flow from the restrictor is available when the solenoid valve is not actuated. The main seat is only opened by energising the solenoid valve.

When the solenoid valve is switched off, the main seat is closed and only the air flow from the flow control valve is available.
The solenoid valve should remain switched on in order to vent a system as this increases the flow rate from 2 and 1 and reduces the exhaust time.

- Solenoid actuated soft-start valve for slowly pressurising and venting pneumatic installations
- The drives advance slowly and reliably into the initial position
- Sudden and erratic movements are avoided
- With solenoid coil without plug socket
- Switch-through pressure can be precisely controlled using a solenoid valve
- Adjustable switching time delay
- Three voltage ranges can be selected
- Non-detenting and detenting manual override (variant 10V24: only non-detenting)
- Solenoid actuator can be repositioned by 180°
- Optional pressure sensor
- Optional device variant EX2 for use in potentially explosive areas in zones 2 and 22

General technical data						
Size		MS4		MS6		
Pneumatic connection 1, 2		G⅛	G¼	G¼	G⅜	G½
Design		Piston poppet valve				
Type of mounting		Via accessories				
		In-line installation				
Assembly position		Any				
Pressure indicator		Via pressure sensor for displaying output pressure via LCD display and electrical output				
		Via pressure sensor for displaying output pressure via operational status indicator and electrical output				
		Via pressure gauge for displaying output pressure				
		Via pressure gauge with red/green scale for displaying output pressure				
		G¼ prepared				
		G⅛ prepared		–		
Valve function		2/2-way valve				
Exhaust function		Flow control				
Type of reset		Mechanical spring				
Switching position display		Via accessories				
Pilot control mode		Piloted				
Pilot air supply		External				
Direction of flow		Non-reversible				
C value	[l/(s*bar)]	4.6	9.6	11.22	21.05	28.97
b value		0.5	0.45	0.54	0.48	0.39

Note: This product conforms to ISO 1179-1 and to ISO 228-1

Soft-start valves MS4/MS6-DE, MS series

Technical data

Electrical data		
Coil characteristics	V24	24 V DC: 1.5 W; perm. voltage fluctuations –25%/+10%
	10V24	24 V DC: 2.5 W; perm. voltage fluctuations ±10%
	10V24P	24 V DC: 1.8 W; perm. voltage fluctuations –15%/+10%
	V110	110 V AC: 50/60 Hz; pick-up power 3.0 W; holding power 2.4 W; perm. voltage fluctuations ±10%
	V230	230 V AC: 50/60 Hz; pick-up power 3.0 W; holding power 2.4 W; perm. voltage fluctuations –14%/+10%
Electrical connection	V24, 10V24, V110, V230	Plug, square design to EN 175301-803, type C
	10V24P	M12x1 to IEC 61076-2-101
Protection class solenoid coil		IP65
Duty cycle [%]		100

Standard nominal flow rate qnN[1] [l/min]					
Size	MS4		MS6		
Pneumatic connection	G⅛	G¼	G¼	G⅜	G½
In main flow direction 1 → 2	1,000	2,000	2,700	5,050	6,450
In relief direction 2 → 1[2]	1,000	2,000	2,600	5,050	6,400

1) Measured at p1 = 6 bar and p2 = 5 bar, Δp = 1 bar
2) For energised solenoid valve.

Operating and environmental conditions							
Variant		Coil parameter V24, V110, V230		Coil parameter 10V24, 10V24P		Pressure sensor AD...	
Size		MS4	MS6	MS4	MS6	MS4	MS6
Operating pressure	[bar]	4 ... 14	4 ... 18	4 ... 10	4 ... 10	4 ... 10	4 ... 10
Operating medium		Compressed air in accordance with ISO 8573-1:2010 [7:4:4]					
		Inert gases					
Note on operating/pilot medium		Operation with lubricated medium possible (in which case lubricated operation will always be required)					
Ambient temperature	[°C]	–10 ... +60	–10 ... +60	–10 ... +50	–10 ... +50	0 ... +50	0 ... +50
Temperature of medium	[°C]	–10 ... +60	–10 ... +60	–10 ... +50	–10 ... +50	0 ... +50	0 ... +50
Corrosion resistance	CRC[1]	2					

1) Corrosion resistance class 2 according to Festo standard 940 070
Components requiring moderate corrosion resistance. Externally visible parts with primarily decorative surface requirements which are in direct contact with a normal industrial environment or media such as coolants or lubricating agents.

ATEX	
Variant	EX2
ATEX category gas	II 3G
Ex-ignition protection type gas	Ex nA II T4 X
ATEX category dust	II 3D
EX-ignition protection type dust	Ex tD A22 IP65 T105°C X
ATEX ambient temperature	–10 °C ≤ Ta ≤ +60 °C
ATEX certification	For zones 2 and 22
CE mark (see declaration of conformity)	To EU Explosion Protection Directive (ATEX)

Soft-start valves MS4/MS6-DE, MS series

Technical data

FESTO

Weights [g]		
Size	MS4	MS6
Soft-start valve	263	680

Materials

Sectional view

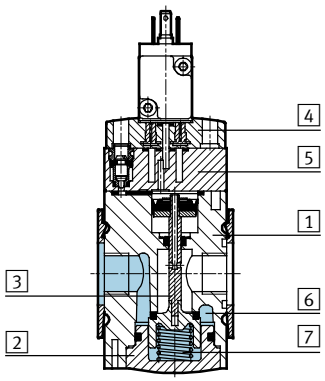

Soft-start valve		
1	Body	Die-cast aluminium
2	Base	PET
3	Valve stem	Aluminium
4	End cap	PA
5	Top plate	PA
6	Seat	Aluminium
7	Springs	Spring steel
–	Seals	NBR
Note on materials		RoHS-compliant
		Free of copper and PTFE (not with variants AG, 10V24, 10V24P or AD...)

New
Variant 10V24P

Soft-start valves MS4/MS6-DE, MS series

Technical data

FESTO

Dimensions – Basic version Download CAD data ➔ **www.festo.com**

With female thread, with cover plate

Supply voltage V24/10V24/V110/V230

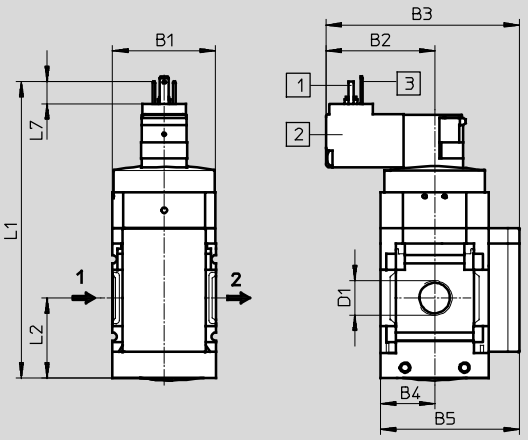

Supply voltage 10V24P

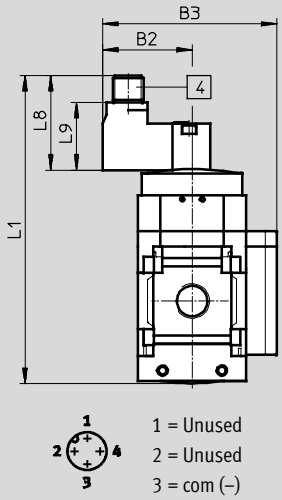

1 = Unused
2 = Unused
3 = com (–)
4 = Signal (+) solenoid 14

1 Plug connection to EN 175301-803
2 Solenoid actuator can be re-positioned by 180°, i.e. solenoid points to the front
3 PIN only with solenoid actuators 110 V and 230 V
4 Electrical connection to IEC 61076-2-101, plug M12x1, 2 pin for NEBU-M12

➔ Flow direction

Supply voltage V24/V110/V230

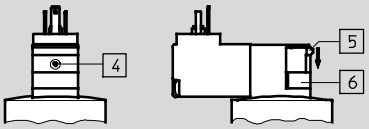

Note

For detenting manual override remove the grey cover plate 6 and press the slide 5 downwards.

Supply voltage 10V24/10V24P

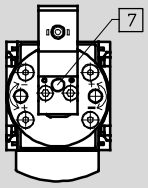

4 Manual override, non-detenting (delivery status)
5 Slide
6 Cover plate
7 Non-detenting and detenting manual override (variant 10V24: only non-detenting)

Type	B1	B2		B3		B4	B5	D1
		V24/ V110/ V230	10V24/ 10V24P	V24/ V110/ V230	10V24/ 10V24P			
MS4-DE-⅛	40	42.2	34.9	75.2	67.9	21	54	G⅛
MS4-DE-¼								G¼
MS6-DE-¼	62	52	44.7	97	89.7	31	76	G¼
MS6-DE-⅜								G⅜
MS6-DE-½								G½

Type	L1			L2	L7	L8	L9
	V24/ V110/ V230	10V24	10V24P				
MS4-DE-⅛	115.4	112.9	117.8	31.5	8.6	36.7	26.1
MS4-DE-¼							
MS6-DE-¼	147	144.9	149.8	45.5	8.6	36.7	26.1
MS6-DE-⅜							
MS6-DE-½							

Note: This product conforms to ISO 1179-1 and to ISO 228-1

Soft-start valves MS4/MS6-DE, MS series

Technical data

FESTO

Dimensions – Pressure gauge/pressure gauge alternatives Download CAD data ➔ **www.festo.com**

Integrated MS pressure gauge with standard scale AG or red-green scale RG, display unit [bar]

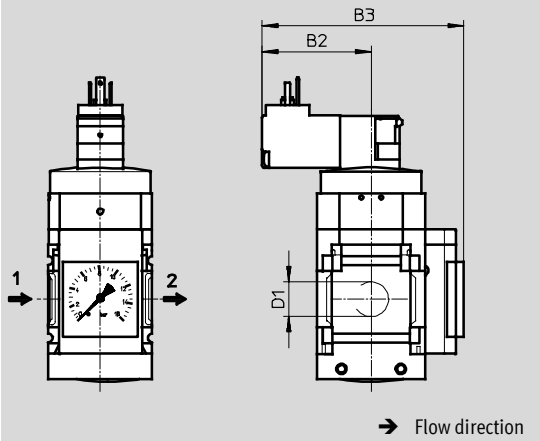

Adapter plate A8/A4 for EN pressure gauge ⅛/¼, without pressure gauge

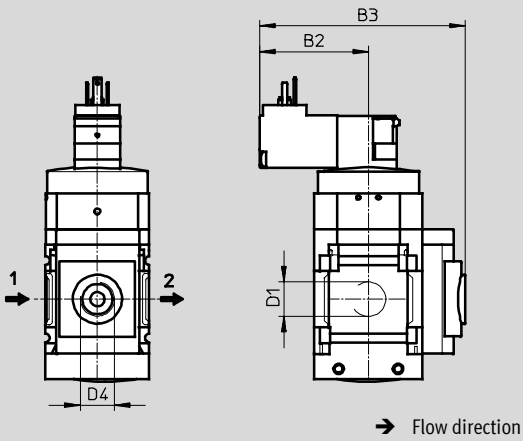

Type	B2		B3		D1	D4
	V24/V110/V230	10V24/10V24P	V24/V110/V230	10V24/10V24P		
MS4-DE-⅛-...-AG	42.2	34.9	86.2	78.9	G⅛	–
MS4-DE-¼-...-AG					G¼	
MS4-DE-⅛-...-RG	42.2	34.9	87.7	80.4	G⅛	–
MS4-DE-¼-...-RG					G¼	
MS4-DE-⅛-...-A8	42.2	34.9	79.7	72.4	G⅛	G⅛
MS4-DE-¼-...-A8					G¼	
MS4-DE-⅛-...-A4	42.2	34.9	79.7	72.4	G⅛	G¼
MS4-DE-¼-...-A4					G¼	
MS6-DE-¼-...-AG	52	44.7	106	98.7	G¼	–
MS6-DE-⅜-...-AG					G⅜	
MS6-DE-½-...-AG					G½	
MS6-DE-¼-...-RG	52	44.7	107.5	100.2	G¼	–
MS6-DE-⅜-...-RG					G⅜	
MS6-DE-½-...-RG					G½	
MS6-DE-¼-...-A4	52	44.7	99.6	92.3	G¼	G¼
MS6-DE-⅜-...-A4					G⅜	
MS6-DE-½-...-A4					G½	

Note: This product conforms to ISO 1179-1 and to ISO 228-1

New
Variant 10V24P

Soft-start valves MS4/MS6-DE, MS series

Technical data

FESTO

Dimensions – Pressure gauge/pressure gauge alternatives Download CAD data ➔ **www.festo.com**

Pressure sensor with LCD display AD1 ... AD4 Technical data ➔ Internet: sde1

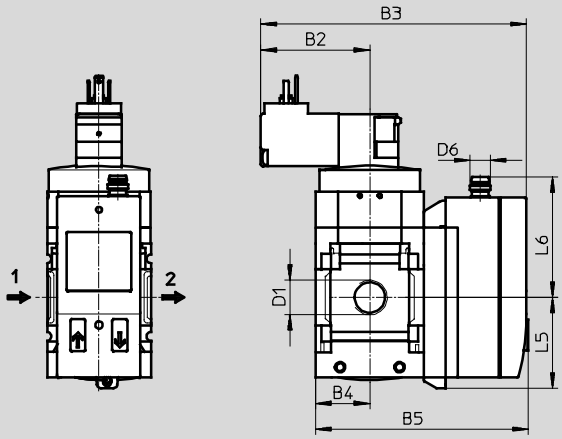

Variant AD1:
SDE1-D10-G2-MS-L-P1-M8 with 3-pin plug M8x1, 1 switching output PNP

Variant AD2:
SDE1-D10-G2-MS-L-N1-M8 with 3-pin plug M8x1, 1 switching output NPN

Variant AD3:
SDE1-D10-G2-MS-L-PI-M12 with 4-pin plug M12x1, 1 switching output PNP and 4 ... 20 mA analogue

Variant AD4:
SDE1-D10-G2-MS-L-NI-M12 with 4-pin plug M12x1, 1 switching output NPN and 4 ... 20 mA analogue

Type	B2		B3		B4	B5	D1	D6	L5	L6
	V24/ V110/ V230	10V24/ 10V24P	V24/ V110/ V230	10V24/ 10V24P						
MS4-DE-⅛-...-AD1/AD2	42.2	34.9	103.8	96.5	21	82.6	G⅛	M8x1	35.1	46.7
MS4-DE-¼-...-AD1/AD2							G¼			
MS4-DE-⅛-...-AD3/AD4	42.2	34.9	103.8	96.5	21	82.6	G⅛	M12x1	35.1	55.8
MS4-DE-¼-...-AD3/AD4							G¼			
MS6-DE-¼-...-AD1/AD2	52	44.7	124	116.7	31	103	G¼	M8x1	35.1	46.7
MS6-DE-⅜-...-AD1/AD2							G⅜			
MS6-DE-½-...-AD1/AD2							G½			
MS6-DE-¼-...-AD3/AD4	52	44.7	124	116.7	31	103	G¼	M12x1	35.1	55.8
MS6-DE-⅜-...-AD3/AD4							G⅜			
MS6-DE-½-...-AD3/AD4							G½			

Note: This product conforms to ISO 1179-1 and to ISO 228-1

Soft-start valves MS4/MS6-DE, MS series

Technical data

FESTO

Dimensions – Pressure gauge/pressure gauge alternatives Download CAD data ➔ **www.festo.com**

Pressure sensor with operational status indicator AD7 ... AD10 Technical data ➔ Internet: sde5

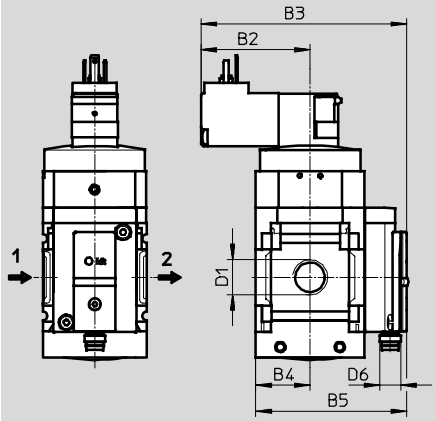

➔ Flow direction

Variant AD7:
SDE5-D10-O-...-P-M8 with 3-pin plug M8x1, threshold value comparator, 1 switching output PNP, N/O contact

Variant AD8:
SDE5-D10-C-...-P-M8 with 3-pin plug M8x1, threshold value comparator, 1 switching output PNP, N/C contact

Variant AD9:
SDE5-D10-O3-...-P-M8 with 3-pin plug M8x1, window comparator, 1 switching output PNP, N/O contact

Variant AD10:
SDE5-D10-C3-...-P-M8 with 3-pin plug M8x1, window comparator, 1 switching output PNP, N/C contact

Type	B2		B3		B4	B5	D1	D6
	V24/ V110/ V230	10V24/ 10V24P	V24/ V110/ V230	10V24/ 10V24P				
MS4-DE-⅛-...-AD7/AD8/AD9/AD10	42.2	34.9	80.3	73	21	59.1	G⅛	M8x1
MS4-DE-¼-...-AD7/AD8/AD9/AD10							G¼	
MS6-DE-¼-...-AD7/AD8/AD9/AD10	52	44.7	100.2	92.9	31	79	G¼	M8x1
MS6-DE-⅜-...-AD7/AD8/AD9/AD10							G⅜	
MS6-DE-½-...-AD7/AD8/AD9/AD10							G½	

Note: This product conforms to ISO 1179-1 and to ISO 228-1

Ordering data

Size	Connection	Supply voltage 24 V DC		Supply voltage 110 V AC		Supply voltage 230 V AC	
		Part No.	Type	Part No.	Type	Part No.	Type
MS4	G⅛	**542560**	**MS4-DE-⅛-10V24**	**529525**	**MS4-DE-⅛-V110**[1)]	**529527**	**MS4-DE-⅛-V230**[1)]
	G¼	**542558**	**MS4-DE-¼-10V24**	**529519**	**MS4-DE-¼-V110**[1)]	**529521**	**MS4-DE-¼-V230**[1)]
MS6	G¼	**542564**	**MS6-DE-¼-10V24**	**529805**	**MS6-DE-¼-V110**[1)]	**529807**	**MS6-DE-¼-V230**[1)]
	G⅜	**542566**	**MS6-DE-⅜-10V24**	**529811**	**MS6-DE-⅜-V110**[1)]	**529813**	**MS6-DE-⅜-V230**[1)]
	G½	**542562**	**MS6-DE-½-10V24**	**529799**	**MS6-DE-½-V110**[1)]	**529801**	**MS6-DE-½-V230**[1)]

1) Free of copper and PTFE

New
Variant 10V24P

Soft-start valves MS4/MS6-DE, MS series

Ordering data – Modular products

FESTO

M **Mandatory data**

Module No.	Series	Size		Function		Pneumatic connection		Supply voltage	
527713 527686	MS	4 6		DE		1/8, 1/4, 3/8, 1/2, AGA, AGB, AGC, AGD, AGE		V24, 10V24, 10V24P, V110, V230	
Order example									
527713	**MS**	**4**	**–**	**DE**	**–**	**AGA**	**–**	**V110**	**–**

Ordering table

Grid dimension [mm]	40	62	Condi-tions	Code	Enter code
M Module No.	**527713**	**527686**			
Series	Standard			**MS**	MS
Size	4	6		**...**	
Function	Soft-start valve, electrical			**-DE**	-DE
Pneumatic connection	Female thread G1/8	–	5	**-1/8**	
	Female thread G1/4	Female thread G1/4	5	**-1/4**	
	–	Female thread G3/8	5	**-3/8**	
	–	Female thread G1/2	5	**-1/2**	
	Connecting plate G1/8	–		**-AGA**	
	Connecting plate G1/4	Connecting plate G1/4		**-AGB**	
	Connecting plate G3/8	Connecting plate G3/8		**-AGC**	
	–	Connecting plate G1/2		**-AGD**	
	–	Connecting plate G3/4		**-AGE**	
Supply voltage	24 V DC (pin allocation to EN 175301) 4 ... 14 bar	4 ... 18 bar		**-V24**	
	24 V DC (pin allocation to EN 175301) 4 ... 10 bar	4 ... 10 bar	1 5	**-10V24**	
	24 V DC, M12 to IEC 61076-2-101 4 ... 10 bar	4 ... 10 bar	1 5	**-10V24P**	
	110 V AC (pin allocation to EN 175301) 4 ... 14 bar	4 ... 18 bar	5	**-V110**	
	230 V AC (pin allocation to EN 175301) 4 ... 14 bar	4 ... 18 bar	5	**-V230**	

1 **10V24, 10V24P**
Max. operating pressure 10 bar

Transfer order code

	MS		–	DE	–		–	

Soft-start valves MS4/MS6-DE, MS series

FESTO

Ordering data – Modular products

➔ 0 **Options**

	Pressure gauge/pressure gauge alternatives		Alternative pressure gauge scale		Type of mounting		EU certification		Flow direction
	AG, A8, A4, RG, AD1, AD2, AD3, AD4, AD7, AD8, AD9, AD10		PSI, MPA		WP, WPM, WB, WBM		EX2		Z
–	**AG**	–	**PSI**	–	**WP**	–		–	**Z**

Ordering table

Grid dimension [mm]		40	62	Conditions	Code		Enter code
0	Pressure gauge/pressure gauge alternatives	MS pressure gauge (with adapter plate)	MS pressure gauge		**-AG**		
		Adapter plate for EN pressure gauge 1/8, without pressure gauge	–		**-A8**		
		Adapter plate for EN pressure gauge 1/4, without pressure gauge			**-A4**		
		Integrated pressure gauge, red-green scale			**-RG**		
		Pressure sensor with LCD display, plug M8, 1 switching output PNP, 3-pin		2 5	**-AD1**		
		Pressure sensor with LCD display, plug M8, 1 switching output NPN, 3-pin		2 5	**-AD2**		
		Pressure sensor with LCD display, plug M12, 1 switching output PNP, 4-pin, analogue output 4 ... 20 mA		2 5	**-AD3**		
		Pressure sensor with LCD display, plug M12, 1 switching output NPN, 4-pin, analogue output 4 ... 20 mA		2 5	**-AD4**		
		Pressure sensor with operational status indicator, plug M8, threshold value comparator, PNP, N/O contact		2 5	**-AD7**		
		Pressure sensor with operational status indicator, plug M8, threshold value comparator, PNP, N/C contact		2 5	**-AD8**		
		Pressure sensor with operational status indicator, plug M8, window comparator, PNP, N/O contact		2 5	**-AD9**		
		Pressure sensor with operational status indicator, plug M8, window comparator, PNP, N/C contact		2 5	**-AD10**		
	Alternative pressure gauge scale	psi		3	**-PSI**		
		MPa		3	**-MPA**		
	Type of mounting	Mounting bracket		4	**-WP**		
		Mounting bracket		4 5	**-WPM**		
		Mounting bracket			**-WB**		
		Mounting bracket	–		**-WBM**		
	EU certification	II 3GD to EU Directive 94/9/EG			**-EX2**		
	Flow direction	Flow direction from right to left			**-Z**		

2 **AD1 ... AD4,AD7 ... AD10** Measuring range max. 10 bar

3 **PSI, MPA** Only with pressure gauge AG or RG

4 **WP, WPM** Only with connecting plate AGA, AGB, AGC, AGD or AGE

5 **1/8, 1/4, 3/8, 1/2, 10V24, 10V24P, V110, V230, AD1 ... AD4, AD7 ... AD10, WPM** Not with EU EX2 certification

Transfer order code

–		–		–		–		–	

Soft start and exhaust valves MS6-SV, MS series

Peripherals overview

FESTO

Soft start and exhaust valves MS6-SV

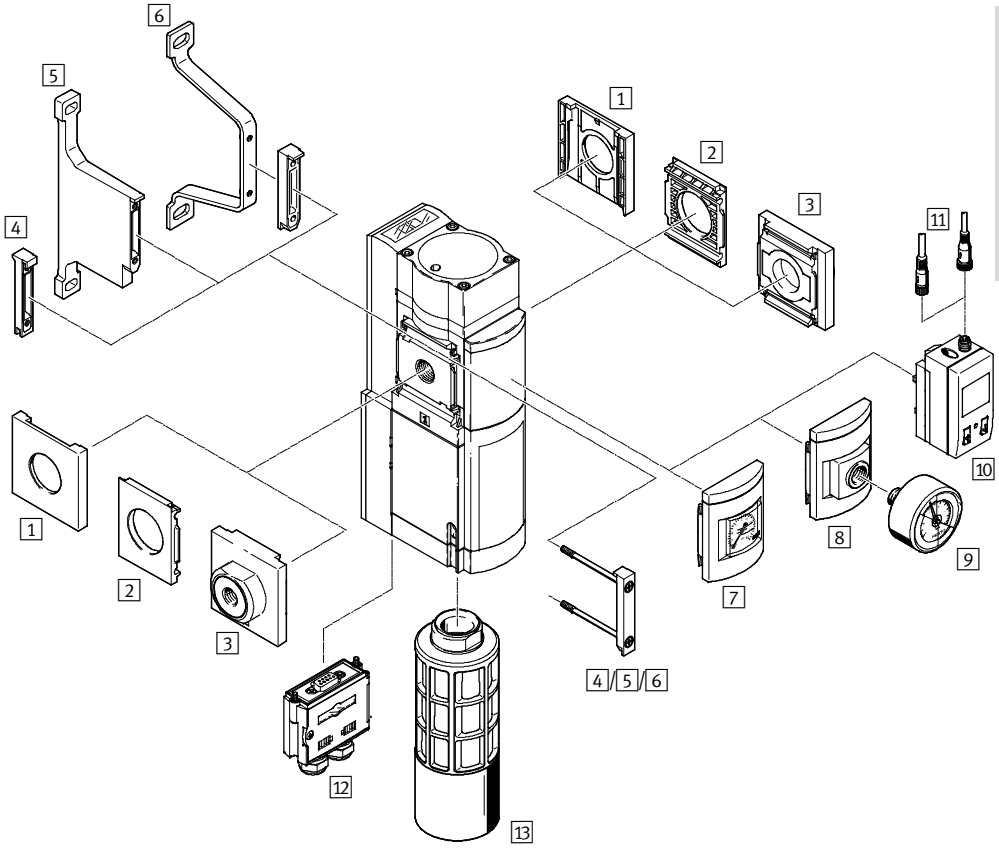

Note

Other accessories:

- Module connector for combination with sizes MS4/MS6 or size MS9 ➔ Internet: amv, rmv, armv
- Adapter plate for mounting on profiles ➔ Internet: ipm-80, ipm-40-80, ipm-80-80

Soft start and exhaust valves MS6-SV, MS series

Peripherals overview

Mounting attachments and accessories						
		Individual device		Combination		➔ Page/Internet
		Without connecting plate	With connecting plate	Without connecting plate	With connecting plate	
1	Cover cap MS6-END	–	–	■	–	ms6-end
2	Mounting plate MS6-AEND	■1)	–	■2)	–	ms6-aend
3	Connecting plate MS6-AG...	–	■1)	–	■2)	ms6-ag
4	Module connector MS6-MV	–	–	■	■	ms6-mv
5	Mounting bracket MS6-WPB	■	■	■	■	ms6-wpb
6	Mounting bracket MS6-WPE	■	■	■	■	ms6-wpe
7	MS pressure gauge AG	■	■	■	■	60
8	Adapter plate for EN pressure gauge ¼ A4	■	■	■	■	60
9	Pressure gauge MA	■	■	■	■	107
10	Pressure sensor with display AD1 ... AD4	■	■	■	■	60
11	Connecting cable NEBU-M8...-LE3/NEBU-M12...-LE4	■	■	■	■	107
12	Multi-pin plug socket NECA	■	■	■	■	62
13	Silencer UOS-1	■	■	■	■	63

1) Mounting bracket MS6-WPB/WPE is required for mounting.
2) Module connector MS6-MV or mounting bracket MS6-WPB/WPE is required for mounting.

New

Soft-start and exhaust valves MS6-SV, MS series

FESTO

Type codes

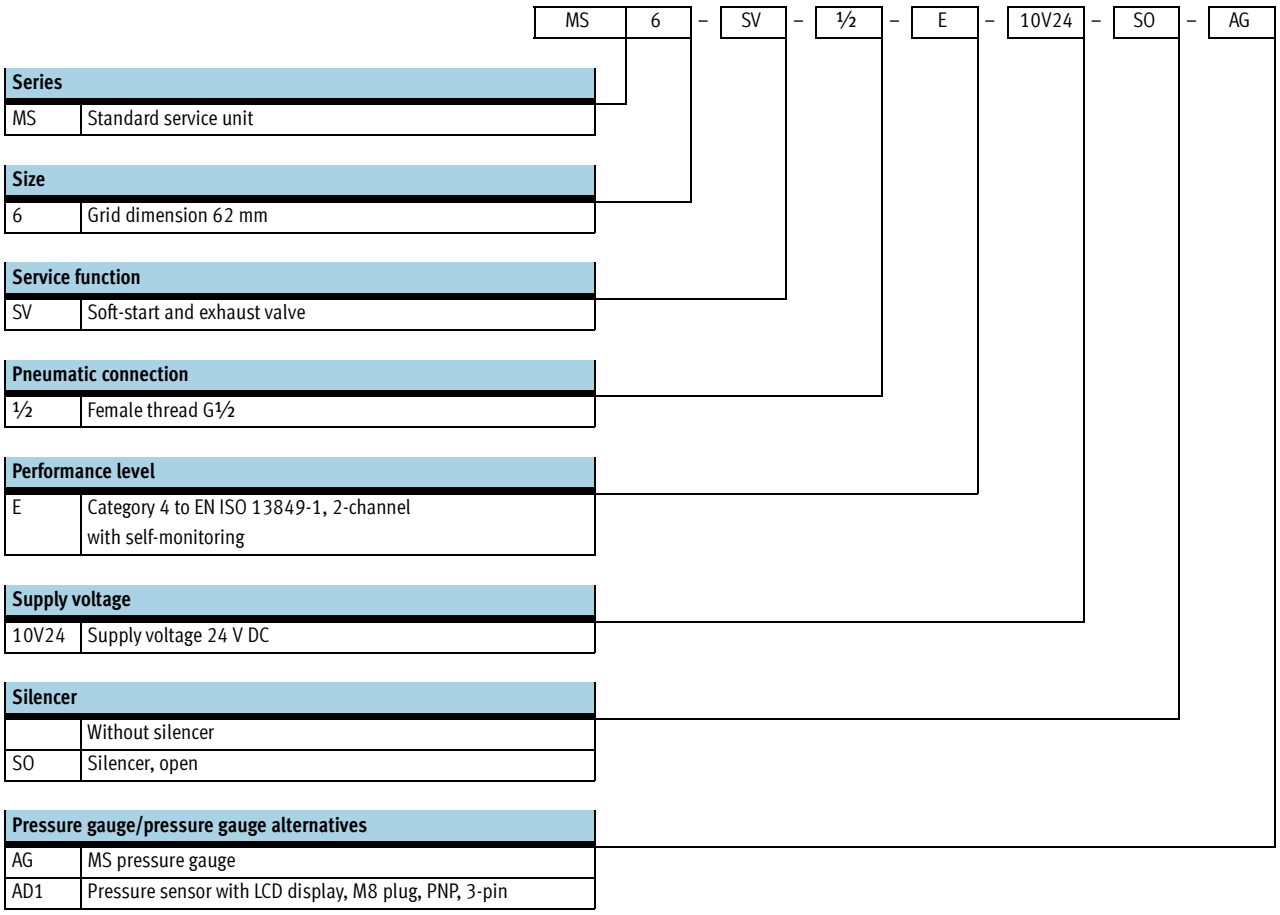

Series	
MS	Standard service unit

Size	
6	Grid dimension 62 mm

Service function	
SV	Soft-start and exhaust valve

Pneumatic connection	
½	Female thread G½

Performance level	
E	Category 4 to EN ISO 13849-1, 2-channel with self-monitoring

Supply voltage	
10V24	Supply voltage 24 V DC

Silencer	
	Without silencer
SO	Silencer, open

Pressure gauge/pressure gauge alternatives	
AG	MS pressure gauge
AD1	Pressure sensor with LCD display, M8 plug, PNP, 3-pin

Additional variants can be ordered using the modular system ➔ 60

- Connecting plates
- Pressure gauge/pressure gauge alternatives
- Alternative pressure gauge scale
- Multi-pin plug socket
- Type of mounting
- UL certification
- Flow direction

Soft-start and exhaust valves MS6-SV, MS series

Technical data

FESTO

Function

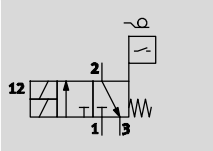

Flow rate
4,300 l/min

Temperature range
–10 ... +50 °C

Operating pressure
3.5 ... 10 bar

www.festo.com

The electropneumatic soft-start and exhaust valve is used to reduce pressure quickly and reliably and to build up pressure gradually in industrial pneumatic systems and terminals.
The device is a self-testing, redundant mechatronic system conforming to the requirements of EN ISO 13849-1. The safety-related pneumatic protection objective of safe venting is also guaranteed in the event of faults inside the valve (e.g. due to wear, contamination, electronic faults). Thanks to the 2-channel design and its monitoring, the device fulfils controller category 3 and 4 requirements. This enables a performance level of max. “e” to be attained.
Via the electrical connection (multi-pin plug socket NECA Sub-D, 9-pin), the device receives the secure enable signals (EN1/EN2) from commercially available electronic or electromechanical protective switchgear, which monitor the protective equipment of the machine (e.g. emergency stop, light curtain, electrical door switch of the protective enclosure etc.).

Note

The device must only be used in conjunction with an NECA approved multi-pin plug socket. This can be ordered via the modular product system (MP... ➔ 60) or as an accessory (NECA ➔ 62).

Note

To avoid back pressures, it is recommended that the device be operated together with the silencer UOS-1.
The silencer can be ordered via the modular product system (SO ➔ 60) or as an accessory (UOS-1 ➔ 63).

Note

Only devices that do not impair the pneumatic protective measure – safe venting – may be placed downstream of the MS6-SV.
The MS6-SV is not permitted for use as a press safety valve.

- Performance level “e”/category 4 to EN ISO 13849-1
- Conforms to IEC 61508
- A switching time delay adjusted via a flow control valve for gradual pressure build-up
- Optional pressure sensor

Safety-related characteristics	
Conforms to	EN ISO 13849-1
Safety function	Venting
	Protection against manipulation, prevention of unexpected start-up
Performance Level (PL)	Venting: category 4, PL e
	Protection against manipulation, prevention of unexpected start-up: category 4, PL e
Safety Integrity Level (SIL)	Venting: SIL 3
	Protection against manipulation, prevention of unexpected start-up: SIL 3
Reliable component	Yes
Note on forced checking procedure	Switching frequency min. 1/month
Certificate issuing authority	BGIA 0904020
CE marking (see declaration of conformity)	To EC Machinery Directive
	To EU EMC Directive
Shock resistance	Shock test with severity level 2 according to FN 942017-5 and EN 60068-2-27
Vibration resistance	Transport application test with severity level 2 to FN 942017-4 and EN 60068-2-6

Note on forced checking procedure: Switching frequency min. 1/month

The mechanical system is not tested in the controlled (i.e. pressurised) state. If the process-related switching frequency (safe venting) is less than once a month, the machine operator must carry out a forced switch-off.

New

Soft-start and exhaust valves MS6-SV, MS series

Technical data

General technical data	
Pneumatic connection 1, 2	G½
Pneumatic connection 3	G1
Type of actuation	Electrical
Design	Piston seat
Type of mounting	Via accessories
	In-line installation
Mounting position	Any
Pressure display	Via pressure sensor for displaying output pressure via LCD display and electrical output
	Via pressure gauge for displaying output pressure
	G¼ prepared
Position sensing principle	Solenoid piston principle
Valve function	3/2-way valve, single solenoid, closed
	Soft-start function
Freedom from overlap	No
Exhaust function	Without flow control
Manual override	None
Reset method	Mechanical spring
Switching position display	LED and floating contact
Type of control	Piloted
Pilot air supply	Internal
Sealing principle	Soft
C value [l/(s*bar)]	19.3
b value	0.21

Note: This product conforms to ISO 1179-1 and to ISO 228-1

Standard nominal flow rate qnN[1] [l/min]	
In main flow direction 1 → 2	4,300
In relief direction 2 → 3	9,000[2]

1) Measured at p1 = 6 bar and p2 = 5 bar, Δp = 1 bar
2) Measured with respect to atmosphere with silencer UOS-1

Electrical data		
Electrical connection		Sub-D, 9-pin
Nominal operating voltage	[V DC]	24
Perm. voltage fluctuations	[%]	±10
Duty cycle	[%]	100
Max. switching frequency	[Hz]	1
Response time off	[ms]	40
Response time on	[ms]	130
Degree of protection		IP65 with multi-pin plug socket NECA

Soft-start and exhaust valves MS6-SV, MS series

Technical data

Operating and environmental conditions			
Variant		Standard	Pressure sensor AD...
Operating pressure	[bar]	3.5 ... 10	3.5 ... 10
Operating medium		Compressed air in accordance with ISO 8573-1:2010 [7:4:4]	
Note on operating/pilot medium		Operation with lubricated medium possible (in which case lubricated operation will always be required)	
Ambient temperature	[°C]	–10 ... +50	0 ... +50
Temperature of medium	[°C]	–10 ... +50	0 ... +50
Storage temperature	[°C]	–10 ... +50	0 ... +50
Corrosion resistance class CRC[1)]		2	
Noise level	[dB (A)]	75 (with silencer UOS-1)	
CE mark (see declaration of conformity)		To EU EMC Directive	
		To EU Machinery Directive	
Fire protection classification to UL 94		V0-V2	
Certification		c UL us - Recognized (OL)	
		C-Tick	

1) Corrosion resistance class 2 according to Festo standard 940 070
Components subject to moderate corrosion stress. Externally visible parts with primarily decorative surface requirements which are in direct contact with a normal industrial environment or media such as coolants or lubricating agents.

Weights [g]	
Soft-start and exhaust valve	2,000
Soft-start and exhaust valve with silencer UOS-1	2,200

Materials	
Housing	Die-cast aluminium
Piston spool	High-alloy stainless steel
Seals	NBR
Note on materials	RoHS-compliant

Soft-start and exhaust valves MS6-SV, MS series

Technical data

Multi-pin plug socket

Description		Enable signals (EN1/EN2)	Example of connection
NECA-...-MP1	• Static enable signals (EN1 = 24 V, EN2 = 24 V).	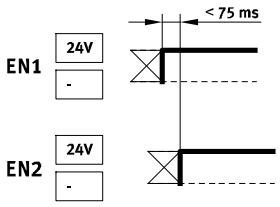	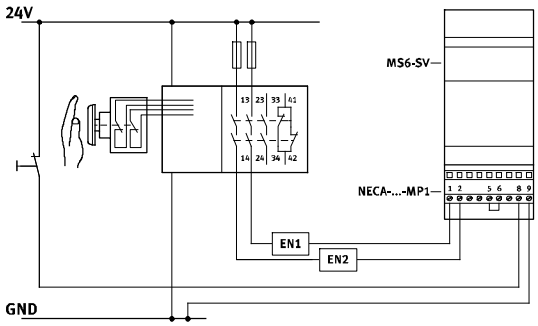
	• Clocked enable signals (EN1 = 0 ... 24 V, EN2 = 0 ... 24 V) for cross circuit detection. Cross circuit detection with clock signals is in principle carried out by the protective switch-gear/safety PLC used.	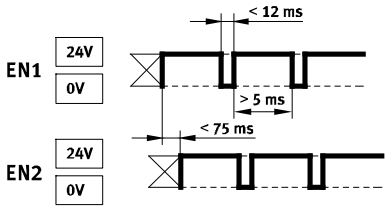 Note Given the fact that clock outputs from different controller manufacturers are not standardised, their usability must be checked in each case. If the clock pulse is outside of the described limits, this is recognised by the MS6-SV as an error and a safe switch-off is performed.	
NECA-...-MP3	• Static enable signals (EN1 = 0 V, EN2 = 24 V). • Static cross circuit monitoring possible. A cross circuit in lines EN1 and EN2 does not lead to inadvertent start-up of the valve.	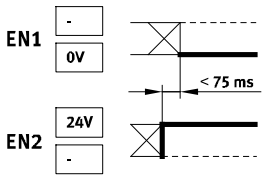	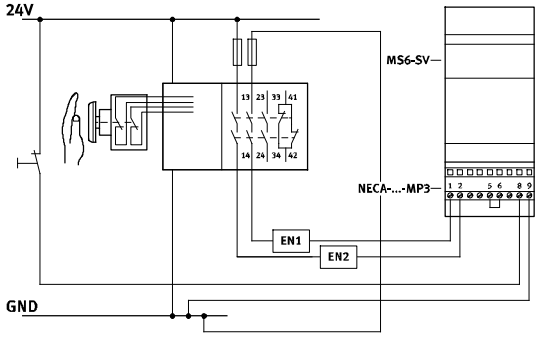

Soft-start and exhaust valves MS6-SV, MS series

Technical data

FESTO

Switching point

Pressure p as a function of time t

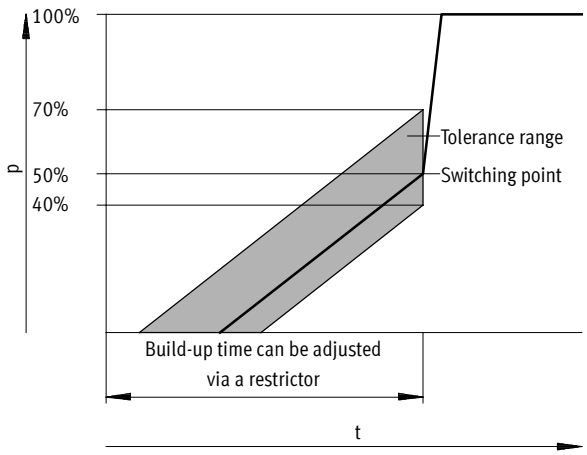

Note

The tolerance specification +20%/–10% of the switching point refers to the operating pressure p1. Example: at an operating pressure of 4 bar a switching point of 1.6 bar to 2.8 bar is permitted.

Dimensions – Basic version

Download CAD data ➔ **www.festo.com**

With female thread ½, with cover plate

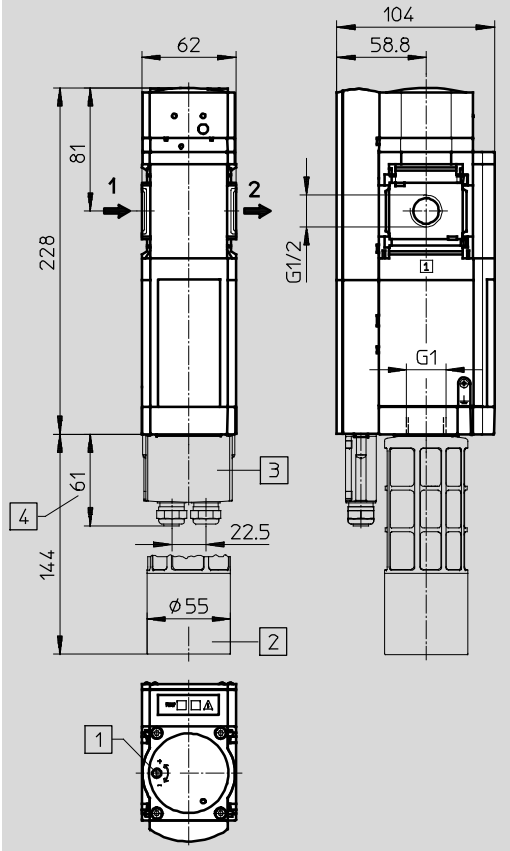

1 Regulating screw for flow control valve
2 Silencer UOS-1
3 Multi-pin plug socket NECA
4 Dimension without cable

➔ Flow direction

Note: This product conforms to ISO 1179-1 and to ISO 228-1

Soft-start and exhaust valves MS6-SV, MS series

Technical data

Dimensions – Pressure gauge/pressure gauge alternatives Download CAD data ➔ **www.festo.com**

Integrated MS pressure gauge AG, display unit [bar]

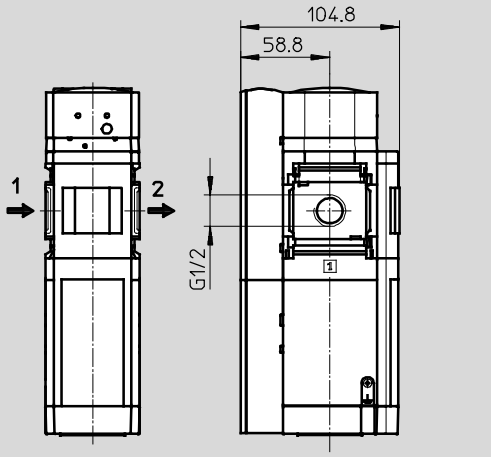

Adapter plate A4 for EN pressure gauge ¼, without pressure gauge

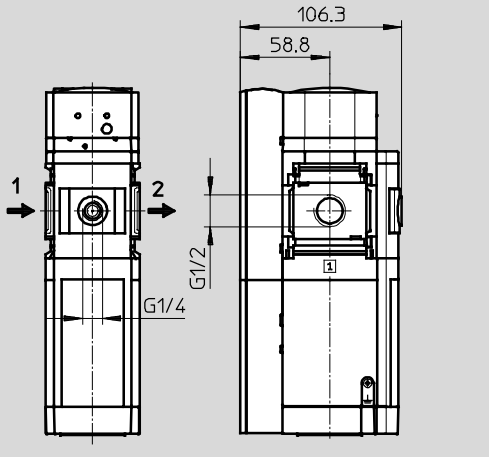

Note: This product conforms to ISO 1179-1 and to ISO 228-1

Dimensions – Pressure gauge/pressure gauge alternatives Download CAD data ➔ **www.festo.com**

Pressure sensor with LCD display AD1 ... AD4 Technical data ➔ Internet: sde1

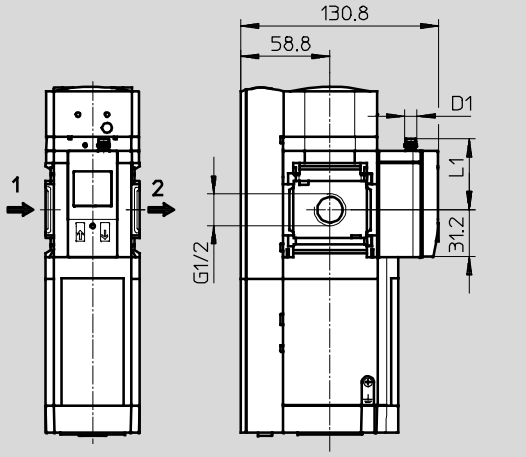

AD1 variants:
SDE1-D10-G2-MS-L-P1-M8
with 3-pin plug M8x1,
1 switching output PNP

AD2 variants:
SDE1-D10-G2-MS-L-N1-M8
with 3-pin plug M8x1,
1 switching output NPN

AD3 variants:
SDE1-D10-G2-MS-L-PI-M12
with 4-pin plug M12x1,
1 switching output PNP
and 4 ... 20 mA analogue

AD4 variants:
SDE1-D10-G2-MS-L-NI-M12
with 4-pin plug M12x1,
1 switching output NPN
and 4 ... 20 mA analogue

Type	D1	L1
MS6-SV-...-AD1/AD2	M8x1	46.7
MS6-SV-...-AD3/AD4	M12x1	55.8

Note: This product conforms to ISO 1179-1 and to ISO 228-1

Soft-start and exhaust valves MS6-SV, MS series

Technical data

FESTO

Ordering data						
Size	Connection	Without silencer			With silencer	
		Part No.	Type		Part No.	Type
MS pressure gauge, display unit [bar]						
MS6	G½	**548715**	**MS6-SV-½-E-10V24-AG**		**548717**	**MS6-SV-½-E-10V24-SO-AG**
Pressure sensor with LCD display, M8 plug, PNP, 3-pin						
MS6	G½	**562580**	**MS6-SV-½-E-10V24-AD1**		–	

Soft-start and exhaust valves MS6-SV, MS series

Ordering data – Modular products

FESTO

M Mandatory data

Module No.	Series	Size		Function		Pneumatic connection		Performance level		Supply voltage	
548713	MS	6	–	SV	–	½, AGB, AGC, AGD, AGE	–	E	–	10V24	–
Order example											
548713	MS	6	–	SV	–	AGB	–	E	–	10V24	–

Ordering table

	Grid dimension [mm]	62	Conditions	Code		Enter code
M	Module No.	**548713**				
	Series	Standard		**MS**		MS
	Size	6		**6**		6
	Function	Soft-start and exhaust valve		**-SV**		-SV
	Pneumatic connection	Female thread G½		**-½**		
		Connecting plate G¼		**-AGB**		
		Connecting plate G⅜		**-AGC**		
		Connecting plate G½		**-AGD**		
		Connecting plate G¾		**-AGE**		
	Performance level	Category 4 to EN ISO 13849-1, 2-channel with self-monitoring		**-E**		-E
↓	Supply voltage	24 V DC (connection pattern to EN 175301), 10 bar		**-10V24**		-10V24

Transfer order code

548713	MS	6	–	SV	–		–	E	–	10V24	

Soft-start and exhaust valves MS6-SV, MS series

FESTO

Ordering data – Modular products

➔ 0 **Options**

	Silencer	Pressure gauge/ pressure gauge alternatives	Alternative pressure gauge scale	Multi-pin plug socket	Mounting type	UL certification	Flow direction
	SO	AG, A4, AD1, AD2, AD3, AD4	PSI, MPA	MP1, MP3	WPB	UL1	Z
–	**SO**	**AG**		**MP1**	**WPB**		

Ordering table

Grid dimension [mm]		62	Conditions	Code	Enter code
0	Silencer	Open silencer		**-SO**	
	Pressure gauge/pressure gauge alternatives	MS pressure gauge		**-AG**	
		Adapter plate for EN pressure gauge ¼, without pressure gauge		**-A4**	
		Pressure sensor with LCD display, plug M8, 1 switching output PNP, 3-pin		**-AD1**	
		Pressure sensor with LCD display, plug M8, 1 switching output NPN, 3-pin		**-AD2**	
		Pressure sensor with LCD display, plug M12, 1 switching output PNP, 4-pin, analogue output 4 ... 20 mA		**-AD3**	
		Pressure sensor with LCD display, plug M12, 1 switching output NPN, 4-pin, analogue output 4 ... 20 mA		**-AD4**	
	Alternative pressure gauge scale	psi	1	**-PSI**	
		MPa	1	**-MPA**	
	Multi-pin plug socket	Sub-D, 9-pin, screw terminal, without cable, enable signals static (EN1 = 24 V, EN2 = 24 V)		**-MP1**	
		Sub-D, 9-pin, screw terminal, without cable, enable signals static (EN1 = 0 V, EN2 = 24 V), short-circuit detection possible		**-MP3**	
	Mounting type	Wall mounting plate, large clearance		**-WPB**	
	UL certification	cULus, ordinary location for Canada and USA		**-UL1**	
	Flow direction	Flow direction from right to left		**-Z**	

1 **PSI, MPA** Not with pressure gauge/pressure gauge alternatives A4, AD1, AD2, AD3, AD4

Transfer order code

–		–		–		–		–		–	

Soft start and exhaust valves MS6-SV, MS series

Accessories

Multi-pin plug socket NECA
(order code: MP1/MP3)

- For soft start and exhaust valve MS6-SV

Material:
Housing: Reinforced polyamide
Screws: Steel
Union nut: Brass
Seals: Nitrile rubber

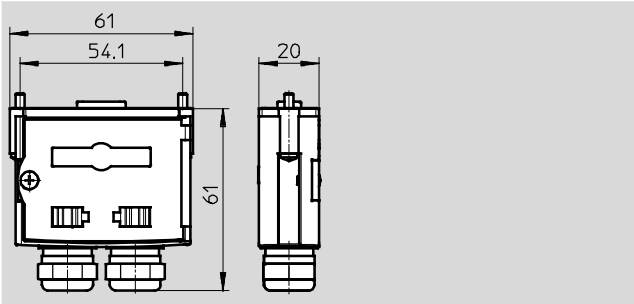

Technical data		
Type of mounting		Via through-holes
Electrical connection		Sub-D, 9-pin, screw terminal 9-pin
Operating voltage range	[V DC]	21.6 ... 26.4
Nominal operating voltage	[V DC]	24
Current-carrying capacity	[A]	1.0
Connection cross section	[mm^2]	0.34 ... 1.0 without wire end sleeves
	[mm^2]	0.34 ... 0.5 with wire end sleeves
Permissible cable diameter	[mm]	5 ... 10
Protection class to IEC 60529		IP65

Operating and environmental conditions		
Relative air humidity		95%, non-condensing
Ambient temperature	[°C]	0 ... +50
Storage temperature	[°C]	–20 ... +70
Corrosion resistance class CRC[1)]		2

1) Corrosion resistance class 2 to Festo standard 940 070
Components subject to moderate corrosion stress. Externally visible parts with primarily decorative surface requirements which are in direct contact with a normal industrial environment or media such as coolants or lubricating agents.

Ordering data

Size	Connection	Weight [g]	Part No.	Type
MS6	Without cable, enable signals static (EN1 = 24 V, EN2 = 24 V)	60	**548719**	**NECA-S1G9-P9-MP1**
	Without cable, enable signals static (EN1 = 0 V, EN2 = 24 V), short-circuit detection possible	60	**552703**	**NECA-S1G9-P9-MP3**

Soft start and exhaust valves MS6-SV, MS series

Accessories

Silencer UOS-1
(order code: SO)
- For soft start and exhaust valve MS6-SV

Materials:
Housing: Polyacetate
Sleeve: Wrought aluminium alloy
Silencer insert: Polyethylene
Free of copper and PTFE

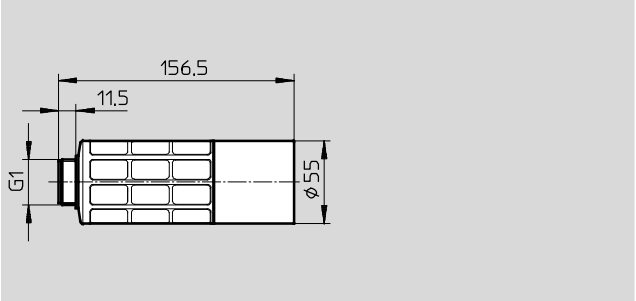

Technical data	
Pneumatic connection	G1
Design	Silencer, open
Type of mounting	Via male thread
Assembly position	Any
Type of seal on threaded collar	No seal

Operating and environmental conditions		
Operating pressure	[bar]	0 ... 10
Operating medium		Compressed air
Ambient temperature	[°C]	–10 ... +50
Corrosion resistance class CRC[1)]		2

1) Corrosion resistance class 2 to Festo standard 940 070
Components subject to moderate corrosion stress. Externally visible parts with primarily decorative surface requirements which are in direct contact with a normal industrial environment or media such as coolants or lubricating agents.

Ordering data			
Size	Weight [g]	Part No.	Type
MS6	200	**552252**	**UOS-1**

On-off valves MS9-EM, MS series

Peripherals overview

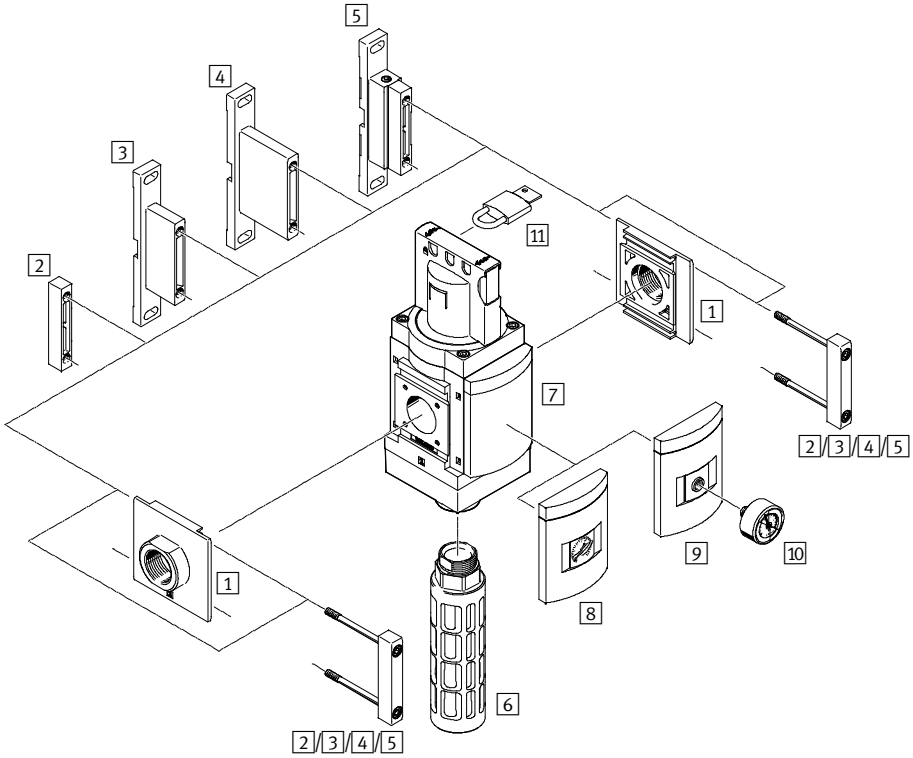

Note

Additional accessories:
- Module connector for combinations with size MS6, MS9 or size MS12
  → Internet: rmv, armv

Mounting attachments and accessories					
		Individual component		Combination	→ Page/Internet
		Without connecting thread	With connecting thread ¾ or 1		
1	Connecting plate MS9-AG...	■	–	■	ms9-ag
2	Module connector MS9-MV	■	–	■	ms9-mv
3	Mounting bracket MS9-WP	■	■	■	ms9-wp
4	Mounting bracket MS9-WPB	■	■	■	ms9-wp
5	Mounting bracket MS9-WPM	■	–	■	ms9-wp
6	Silencer U	■	■	■	107
7	Cover plate VS	■	■	■	70
8	MS pressure gauge AG/RG	■	■	■	70
9	Adapter plate for EN pressure gauge ¼ A4	■	■	■	70
10	Pressure gauge MA	■	■	■	107
11	Padlock LRVS-D	■	■	■	107

On-off valves MS9-EM, MS series

Type codes

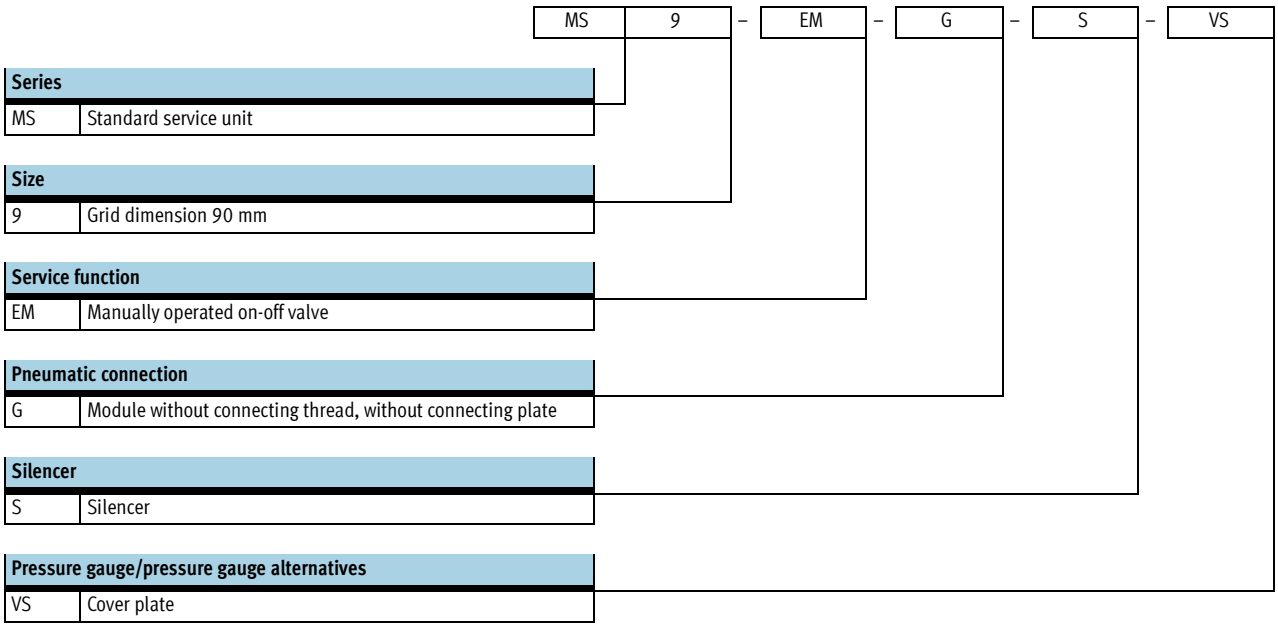

Additional variants can be ordered using the modular system ➔ 70

- Pneumatic connection
- Silencer
- Pressure gauge/pressure gauge alternatives
- Alternative pressure gauge scale
- Valve function
- Type of mounting
- Flow direction

New

On-off valves MS9-EM, MS series

Technical data

2/2-way valve, double solenoid

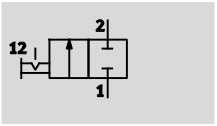

3/2-way valve, double solenoid

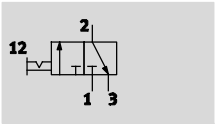

Flow rate
8,000 ... 18,000 l/min

Temperature range
–10 ... +60 °C

Operating pressure
0 ... 20 bar

- Manually operated on-off valve for pressurising and venting pneumatic installations
- Ducted exhaust possible via a threaded connection with silencer
- The switching position is immediately recognisable
- Actuator secured by locking the rotary knob
- Commercially available padlock can be used for security
- Optional pressure gauge

General technical data				
Pneumatic connection 1, 2	G¾ (Female thread)	G1 (Female thread)	G½ ... G1½ (With connecting plate AG...)	– (Module without connecting thread, without connecting plate G)
Pneumatic connection 3	G1			
Design	Piston spool valve			
Type of mounting	Via accessories			
	In-line installation			
Mounting position	Any			
Regulator lock	Rotary knob with detent			
Pressure display	Via pressure gauge for displaying output pressure			
	Via pressure gauge with red/green scale for displaying output pressure			
	G¼ prepared			
Valve function	2/2-way valve, double solenoid			
	3/2-way valve, double solenoid			
Exhaust air function	No flow control			
Reset method	Forced			
Type of control	Direct			
Sealing principle	Soft			

Note: This product conforms to ISO 1179-1 and to ISO 228-1

On-off valves MS9-EM, MS series

Technical data

Flow rate characteristic values								
Pneumatic connection	Female thread		Connecting plate					None
	G¾	G1	AGD	AGE	AGF	AGG	AGH	G
Standard nominal flow rate qnN[1] [l/min]								
In main flow direction 1 ⇢ 2	14,500	18,000	8,000	14,000	18,000	18,000	18,000	18,000
In relief direction 2 ⇢ 3	14,900	14,100	16,500	14,400	13,800	13,200	13,200	14,100
C value [l/s*min]								
In main flow direction 1 ⇢ 2	59.59	76.90	32.75	57.50	75.65	75.51	75.17	–
In relief direction 2 ⇢ 3	55.11	53.54	56.22	54.07	52.73	51.06	51.36	–
b value								
In main flow direction 1 ⇢ 2	0.41	0.37	0.45	0.39	0.38	0.39	0.38	–
In relief direction 2 ⇢ 3	0.50	0.48	0.60	0.49	0.47	0.45	0.44	–

1) Measured at p1 = 6 bar and p2 = 5 bar, Δp = 1 bar

Operating and environmental conditions		
Operating pressure	[bar]	0 ... 20
Operating medium		Compressed air in accordance with ISO 8573-1:2010 [7:4:4]
Note on operating/pilot medium		Operation with lubricated medium possible (in which case lubricated operation will always be required)
Ambient temperature	[°C]	–10 ... +60
Temperature of medium	[°C]	–10 ... +60
Corrosion resistance class CRC[1]		2
Noise level	[dB (A)]	93[2] with silencer
CE mark (see declaration of conformity)		To EU Explosion Protection Directive (ATEX)
ATEX		Specified types ➔ www.festo.com

1) Corrosion resistance class 2 according to Festo standard 940 070
Components subject to moderate corrosion stress. Externally visible parts with primarily decorative surface requirements which are in direct contact with a normal industrial environment or media such as coolants or lubricating agents.
2) Venting at 10 bar at a distance of 1 m.

Weight [g]	
On-off valve	2,200
On-off valve with silencer S	2,400

Materials

Sectional view

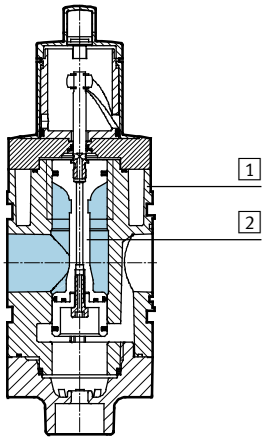

On-off valve		
1	Housing	Die-cast aluminium
2	Piston spool	POM
–	Seals	NBR
Note on materials		RoHS-compliant

On-off valves MS9-EM, MS series

Technical data

FESTO

Dimensions – Basic version Download CAD data ➔ **www.festo.com**

Module without connecting thread, without connecting plate G, with cover plate VS

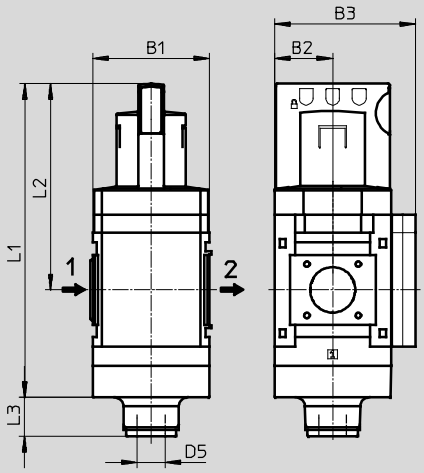

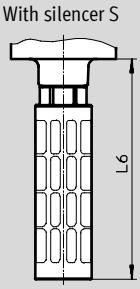

➔ Flow direction

Type	B1	B2	B3	D5	L1	L2	L3		L6
							2/2-way valve	3/2-way valve	
MS9-EM-G	90	45	109	G1	242	159	30	23	189

Dimensions – Connecting thread/connecting plate Download CAD data ➔ **www.festo.com**

With female thread ¾ or 1

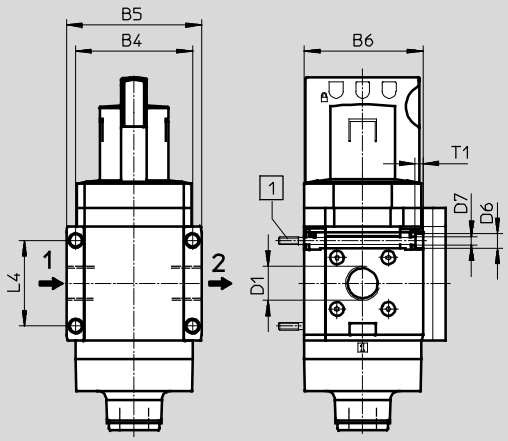

With connecting plate AG...

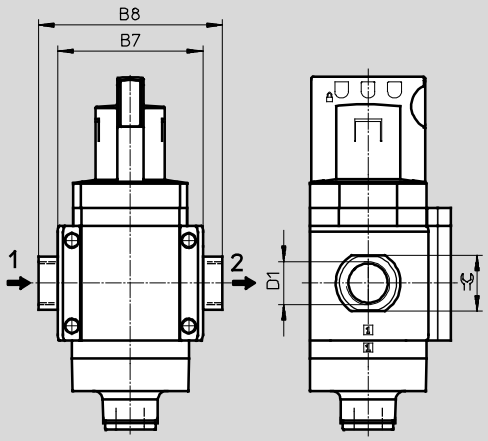

[1] Mounting screw M6xmin.90 to DIN 912 (not included in the scope of delivery) for wall mounting without mounting bracket

➔ Flow direction

Type	B4	B5	B6	B7	B8	D1	D6	D7	L4	T1	⌀C
MS9-EM-¾	90	104	91.5	–	–	G¾	11	6.5	66	6	–
MS9-EM-1						G1					
MS9-EM-AGD	–	–	–	112	132	G½	–	–	–	–	30
MS9-EM-AGE					132	G¾					36
MS9-EM-AGF					142	G1					41
MS9-EM-AGG					162	G1¼					50
MS9-EM-AGH					176	G1½					55

On-off valves MS9-EM, MS series

Technical data

FESTO

Dimensions – Pressure gauge/pressure gauge alternatives Download CAD data ➔ **www.festo.com**

Integrated MS pressure gauge with standard scale AG or red/green scale RG

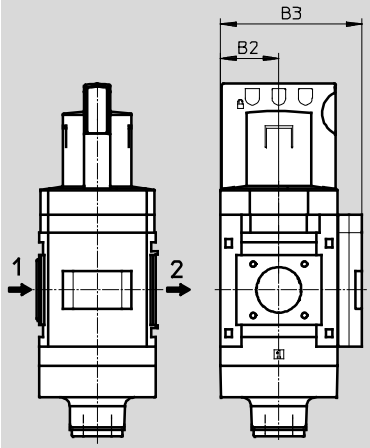

Adapter plate A4 for EN pressure gauge ¼, without pressure gauge

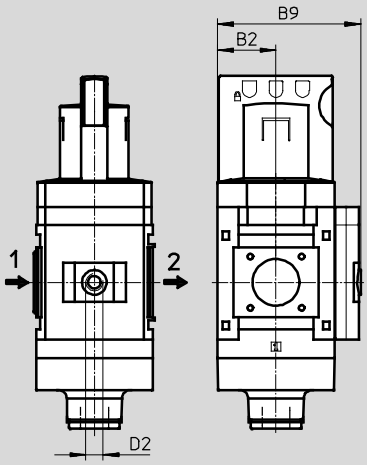

➔ Flow direction

Type	B2	B3	B9	D2
MS9-EM-...-AG/RG	45	109	–	–
MS9-EM-...-A4		–	110	G¼

Note: This product conforms to ISO 1179-1 and to ISO 228-1

Ordering data

3/2-way valve, with silencer

Size	Connection	Part No.	Type
MS9	–	**562952**	**MS9-EM-G-S-VS**

On-off valves MS9-EM, MS series

Ordering data – Modular products

FESTO

M **Mandatory data**

Module No.	Series	Size		Function		Pneumatic connection
562178	MS	9		EM		¾, 1, AGD, AGE, AGF, AGG, AGH, G
Ordering example						
562178	**MS**	**9**	–	**EM**	–	**G**

Ordering table

Grid dimension [mm]		90	Condi-tions	Code		Enter code
M	Module No.	**562178**				
	Series	Standard		**MS**		MS
	Size	9		**9**		9
	Function	Manual on-off valve		**-EM**		-EM
	Pneumatic connection	Female thread G¾		**-¾**		
		Female thread G1		**-1**		
		Connecting plate G½		**-AGD**		
		Connecting plate G¾		**-AGE**		
		Connecting plate G1		**-AGF**		
		Connecting plate G1¼		**-AGG**		
		Connecting plate G1½		**-AGH**		
		Module without connecting thread, without connecting plate		**-G**		

Transfer order code

562178	**MS**	**9**	–	**EM**	–	

On-off valves MS9-EM, MS series

Ordering data – Modular products

FESTO

➔ O Options	M Mandatory data		O Options		
Silencer	**Pressure gauge/ pressure gauge alternatives**	**Alternative pressure gauge scale**	**Valve function**	**Type of mounting**	**Flow direction**
S	AG, VS, A4, RG	PSI, MPA, BAR	- 2	WP, WPM, WPB	Z
– **S**	– **AG**	– **BAR**	–	–	–

Ordering table

Grid dimension [mm]		90	Conditions	Code		Enter code
O	Silencer	Silencer		**-S**		
M	Pressure gauge/pressure gauge alternatives	MS pressure gauge		**-AG**		
		Cover plate		**-VS**		
		Adapter plate for EN pressure gauge ¼, without pressure gauge		**-A4**		
		Integrated pressure gauge, red/green scale	1	**-RG**		
	Alternative pressure gauge scale	Psi	2	**-PSI**		
		MPa	2	**-MPA**		
		Bar	2	**-BAR**		
O	Valve function	Standard (3/2-way valve)		**-**		
		2/2-way valve	3	**-2**		
	Type of mounting	Mounting bracket	4	**-WP**		
		Mounting bracket	4	**-WPM**		
		Mounting bracket for large wall gap	4	**-WPB**		
	Flow direction	Flow direction from right to left		**-Z**		

1 **RG** Not with alternative pressure gauge scale PSI
PSI scale serves only as an auxiliary scale

2 **PSI, MPA, BAR** Not with pressure gauge/pressure gauge alternatives VS, A4

3 **2** Not with silencer S

4 **WP, WPM, WPB** Not with module G

Transfer order code

– _____ – _____ – _____ – _____ – _____ – _____

On-off valves MS9-EE, MS series

Peripherals overview

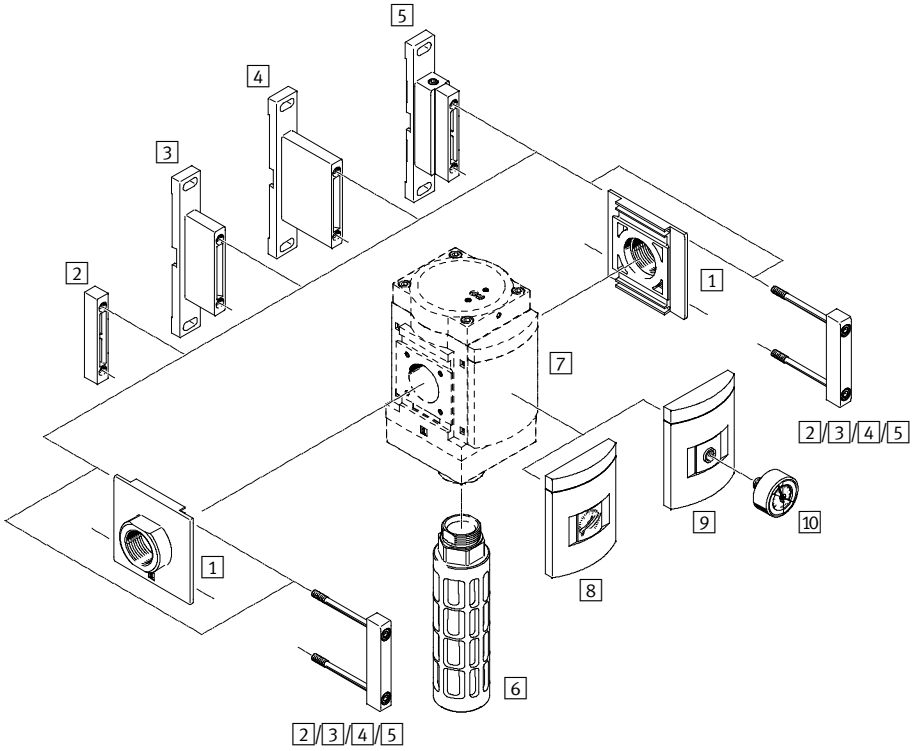

Note

Additional accessories:

– Module connector for combinations with size MS6, MS9 or size MS12
  ➔ Internet: rmv, armv

Supply voltage V24/V110/V230	Supply voltage V24P

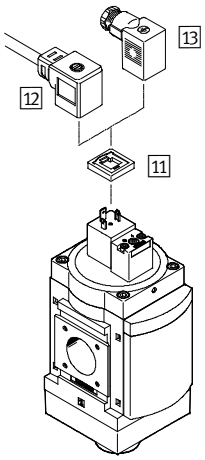

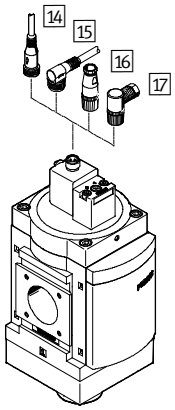

On-off valves MS9-EE, MS series

Peripherals overview

FESTO

Mounting attachments and accessories				
	Individual component		Combination	→ Page/Internet
	Without connecting thread	With connecting thread ¾ or 1		
1 Connecting plate MS9-AG...	■	–	■	ms9-ag
2 Module connector MS9-MV	■	–	■	ms9-mv
3 Mounting bracket MS9-WP	■	■	■	ms9-wp
4 Mounting bracket MS9-WPB	■	■	■	ms9-wp
5 Mounting bracket MS9-WPM	■	–	■	ms9-wp
6 Silencer U	■	■	■	107
7 Cover plate VS	■	■	■	80
8 MS pressure gauge AG/RG	■	■	■	80
9 Adapter plate for EN pressure gauge ¼ A4	■	■	■	80
10 Pressure gauge MA	■	■	■	107
11 Illuminating seal MC-LD	■	■	■	106
12 Plug socket with cable KMC	■	■	■	106
13 Plug socket MSSD-C	■	■	■	106
14 Connecting cable NEBU-M12G5	■	■	■	107
15 Connecting cable NEBU-M12W5	■	■	■	107
16 Sensor socket SIE-GD	■	■	■	107
17 Angled plug socket SIE-WD	■	■	■	107

On-off valves MS9-EE, MS series

Type codes

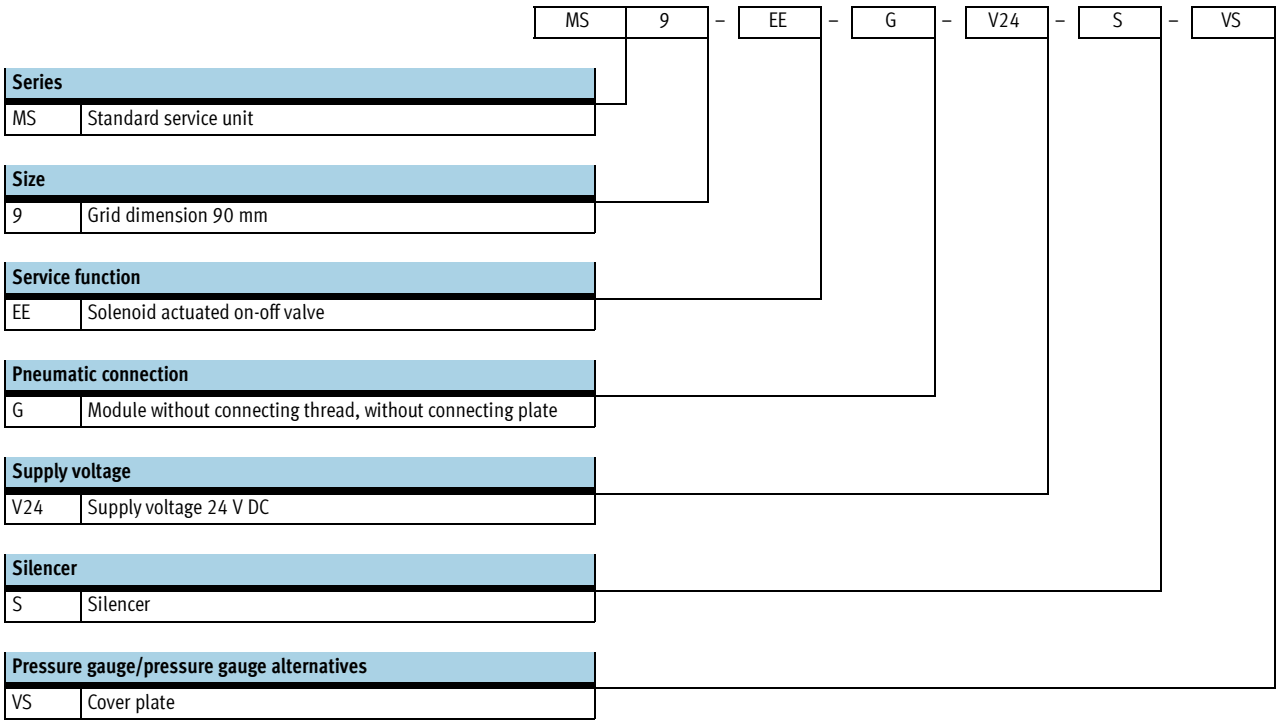

Additional variants can be ordered using the modular system ➔ 80

- Pneumatic connection
- Supply voltage
- Silencer
- Pressure gauge/pressure gauge alternatives
- Alternative pressure gauge scale
- Valve function
- Type of mounting
- Flow direction

On-off valves MS9-EE, MS series

Technical data

FESTO

2/2-way valve, single solenoid, closed

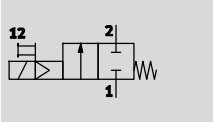

3/2-way valve, single solenoid, closed

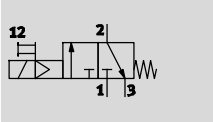

Flow rate
8,000 ... 18,000 l/min

Temperature range
–10 ... +60 °C

Operating pressure
3.5 ... 16 bar

- Solenoid actuated on-off valve for pressurising and venting pneumatic installations
- Ducted exhaust possible via a threaded connection with silencer
- With solenoid coil without plug socket
- 3 voltage ranges can be selected
- Non-detenting or detenting manual override
- Optional pressure gauge

General technical data				
Pneumatic connection 1, 2	G¾ (Female thread)	G1 (Female thread)	G½ ... G1½ (With connecting plate AG...)	– (Module without connecting thread, without connecting plate G)
Pneumatic connection 3	G1			
Design	Piston spool valve			
Type of mounting	Via accessories			
	In-line installation			
Mounting position	Any			
Pressure display	Via pressure gauge for displaying output pressure			
	Via pressure gauge with red/green scale for displaying output pressure			
	G¼ prepared			
Valve function	2/2-way valve, single solenoid, closed			
	3/2-way valve, single solenoid, closed			
Exhaust air function	No flow control			
Reset method	Mechanical spring			
Type of control	Piloted			
Pilot air supply	Internal			
Sealing principle	Soft			

Note: This product conforms to ISO 1179-1 and to ISO 228-1

Electrical data		
Coil characteristics	V24/V24P	24 V DC: 4.5 W; perm. voltage fluctuations ±10%
	V110	110 V AC: 50 Hz; pick-up power 11.5 W; holding power 8.9 W; perm. voltage fluctuations ±10% 110 V AC: 60 Hz; pick-up power 9.5 W; holding power 6.2 W; perm. voltage fluctuations ±10%
	V230	230 V AC: 50 Hz; pick-up power 11.5 W; holding power 9.1 W; perm. voltage fluctuations ±10% 230 V AC: 60 Hz; pick-up power 9.5 W; holding power 6.4 W; perm. voltage fluctuations ±10%
Electrical connection	V24/V110/V230	Plug socket, square design to EN 175301-803, type A
	V24P	Plug M12, 4-pin to DESINA
Protection class for solenoid coil		IP65
Duty cycle [%]		100

On-off valves MS9-EE, MS series

Technical data

FESTO

Flow rate characteristic values								
Pneumatic connection	Female thread		Connecting plate					None
	G¾	G1	AGD	AGE	AGF	AGG	AGH	G
Standard nominal flow rate qnN[1] [l/min]								
In main flow direction 1 → 2	14,500	18,000	8,000	14,000	18,000	18,000	18,000	18,000
In relief direction 2 → 3	14,900	14,100	16,500	14,400	13,800	13,200	13,200	14,100
C value [l/s*min]								
In main flow direction 1 → 2	59.59	76.90	32.75	57.50	75.65	75.51	75.17	–
In relief direction 2 → 3	55.11	53.54	56.22	54.07	52.73	51.06	51.36	–
b value								
In main flow direction 1 → 2	0.41	0.37	0.45	0.39	0.38	0.39	0.38	–
In relief direction 2 → 3	0.50	0.48	0.60	0.49	0.47	0.45	0.44	–

1) Measured at p1 = 6 bar and p2 = 5 bar, Δp = 1 bar

Operating and environmental conditions		
Operating pressure	[bar]	3.5 ... 16
Operating medium		Compressed air in accordance with ISO 8573-1:2010 [7:4:4]
Note on operating/pilot medium		Operation with lubricated medium possible (in which case lubricated operation will always be required)
Ambient temperature	[°C]	–10 ... +60
Temperature of medium	[°C]	–10 ... +60
Corrosion resistance class CRC[1]		2
Noise level	[dB (A)]	93[2] with silencer
CE mark (see declaration of conformity)		To EU Explosion Protection Directive (ATEX)
ATEX		Specified types ➔ www.festo.com

1) Corrosion resistance class 2 according to Festo standard 940 070
Components subject to moderate corrosion stress. Externally visible parts with primarily decorative surface requirements which are in direct contact with a normal industrial environment or media such as coolants or lubricating agents.
2) Venting at 10 bar at a distance of 1 m.

Weight [g]	
On-off valve	2,100
On-off valve with silencer S	2,300

Materials

Sectional view

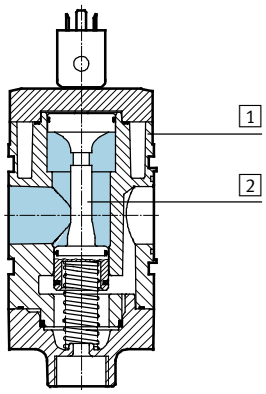

On-off valve	
1 Housing	Die-cast aluminium
2 Piston spool	POM
– Seals	NBR
Note on materials	RoHS-compliant

On-off valves MS9-EE, MS series

Technical data

FESTO

Dimensions – Basic version Download CAD data ➔ **www.festo.com**

Module without connecting thread, without connecting plate G, with cover plate VS

Supply voltage V24/V110/V230

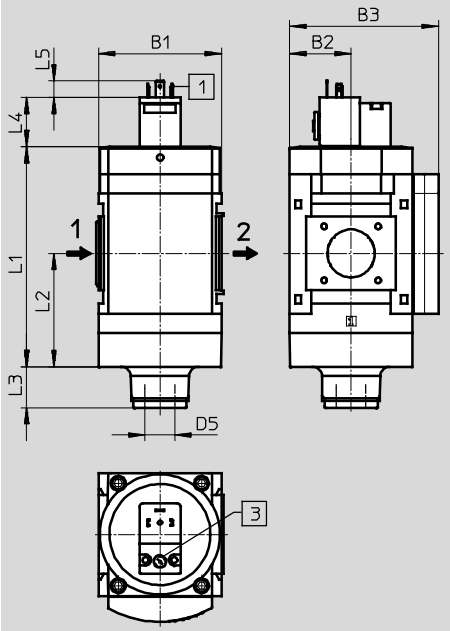

Supply voltage V24P

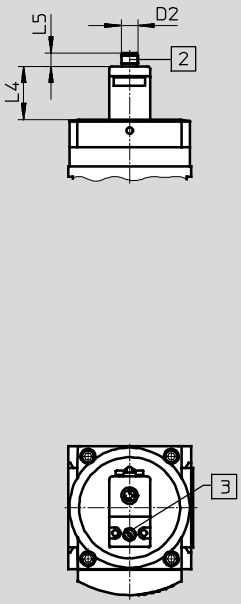

With silencer S

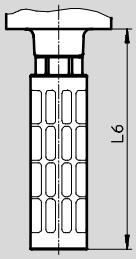

1 Plug connection to EN 175301-803
2 Plug connection M12, 4-pin to DESINA
3 Manual override

➔ Flow direction

Type	B1	B2	B3	D2	D5	L1	L2	L3		L4	L5	L6
								2/2-way valve	3/2-way valve			
MS9-EE-G-V24/V110/V230	90	45	109	–	G1	161	83	30	23	36	12	189
MS9-EE-G-V24P				M12x1						39	10	

On-off valves MS9-EE, MS series

Technical data

FESTO

Dimensions – Connecting thread/connecting plate Download CAD data ➔ **www.festo.com**

With female thread ¾ or 1

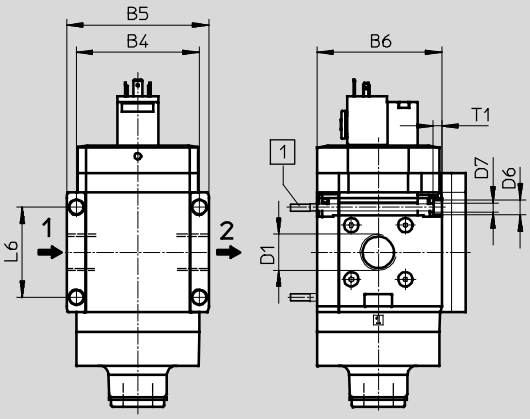

With connecting plate AG...

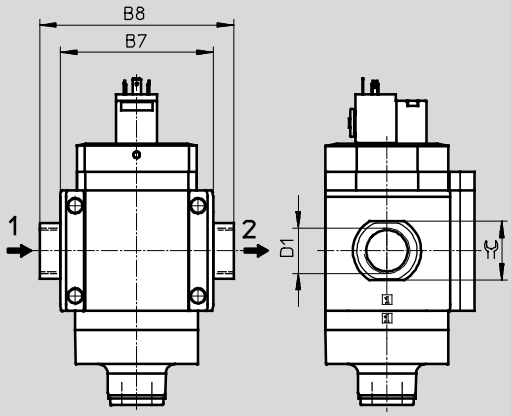

[1] Mounting screw M6xmin.90 to DIN 912 (not included in the scope of delivery) for wall mounting without mounting bracket

➔ Flow direction

Type	B4	B5	B6	B7	B8	D1	D6	D7	L6	T1	⌀
MS9-EE-¾	90	104	91.5	–	–	G¾	11	6.5	66	6	–
MS9-EE-1						G1					
MS9-EE-AGD	–	–	–	112	132	G1½	–	–	–	–	30
MS9-EE-AGE					132	G¾					36
MS9-EE-AGF					142	G1					41
MS9-EE-AGG					162	G1¼					50
MS9-EE-AGH					176	G1½					55

Note: This product conforms to ISO 1179-1 and to ISO 228-1

On-off valves MS9-EE, MS series

Technical data

FESTO

Dimensions – Pressure gauge/pressure gauge alternatives Download CAD data ➔ **www.festo.com**

Integrated MS pressure gauge with standard scale AG or red/green scale RG

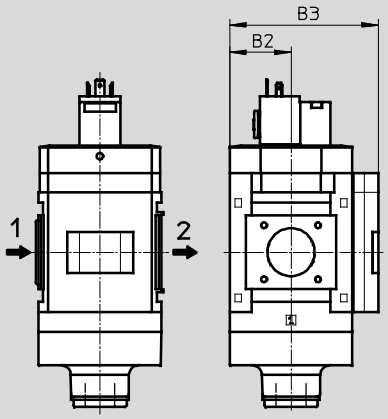

Adapter plate A4 for EN pressure gauge ¼, without pressure gauge

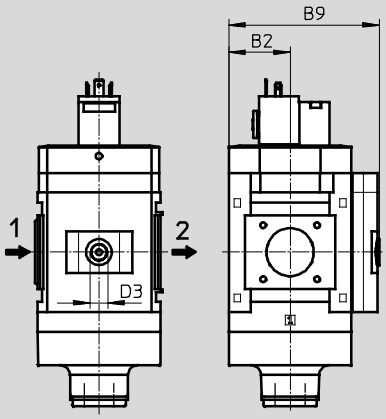

➔ Flow direction

Type	B2	B3	B9	D3
MS9-EE-...-AG/RG	45	109	–	–
MS9-EE-...-A4		–	110	G¼

Note: This product conforms to ISO 1179-1 and to ISO 228-1

Ordering data

3/2-way valve, with silencer, supply voltage 24 V DC

Size	Connection	Part No.	Type
MS9	–	**562940**	**MS9-EE-G-V24-S-VS**

On-off valves MS9-EE, MS series

Ordering data – Modular products

FESTO

M **Mandatory data**

Module No.	Series	Size		Function		Pneumatic connection		Supply voltage
562177	MS	9		EE		¾, 1, AGD, AGE, AGF, AGG, AGH, G		V24, V24P, V110, V230
Ordering example								
562177	**MS**	**9**	–	**EE**	–	**1**	–	**V24**

Ordering table

Grid dimension [mm]		90	Condi-tions	Code		Enter code
M	Module No.	**562177**				
	Series	Standard		**MS**		MS
	Size	9		**9**		9
	Function	Electrical on-off valve		**-EE**		-EE
	Pneumatic connection	Female thread G¾		**-¾**		
		Female thread G1		**-1**		
		Connecting plate G½		**-AGD**		
		Connecting plate G¾		**-AGE**		
		Connecting plate G1		**-AGF**		
		Connecting plate G1¼		**-AGG**		
		Connecting plate G1½		**-AGH**		
		Module without connecting thread, without connecting plate		**-G**		
	Supply voltage	24 V DC (pin allocation to EN 175301), 16 bar		**V24**		
		24 V DC plug (connection pattern M12 to DESINA), 16 bar		**V24P**		
		110 V AC (pin allocation to EN 175301), 16 bar		**V110**		
		230 V AC (pin allocation to EN 175301), 16 bar		**V230**		

Transfer order code

562177	**MS**	**9**	–	**EE**	–		–	

On-off valves MS9-EE, MS series

Ordering data – Modular products

FESTO

➔	O Options		M Mandatory data		O Options		
	Silencer		Pressure gauge/ pressure gauge alternatives	Alternative pressure gauge scale	Valve function	Type of mounting	Flow direction
	S		AG, VS, A4, RG	PSI, MPA, BAR	- 2	WP, WPM, WPB	Z
–	S	–	AG	BAR	–	–	–

Ordering table

Grid dimension [mm]		90	Condi-tions	Code	Enter code
O	Silencer	Silencer		-S	
M	Pressure gauge/pressure gauge alternatives	MS pressure gauge		-AG	
		Cover plate		-VS	
		Adapter plate for EN pressure gauge ¼, without pressure gauge		-A4	
		Integrated pressure gauge, red/green scale	1	-RG	
	Alternative pressure gauge scale	Psi	2	-PSI	
		MPa	2	-MPA	
		Bar	2	-BAR	
O	Valve function	Standard (3/2-way valve)		-	
		2/2-way valve	3	-2	
	Type of mounting	Mounting bracket	4	-WP	
		Mounting bracket	4	-WPM	
		Mounting bracket for large wall gap	4	-WPB	
	Flow direction	Flow direction from right to left		-Z	

1 **RG** Not with alternative pressure gauge scale PSI
PSI scale serves only as an auxiliary scale

2 **PSI, MPA, BAR** Not with pressure gauge/pressure gauge alternatives VS, A4

3 **2** Not with silencer S

4 **WP, WPM, WPB** Not with module G

Transfer order code

–			–		–		–		–	

On-off valves MS12-EM, MS series

Peripherals overview

On-off valves MS12-EM

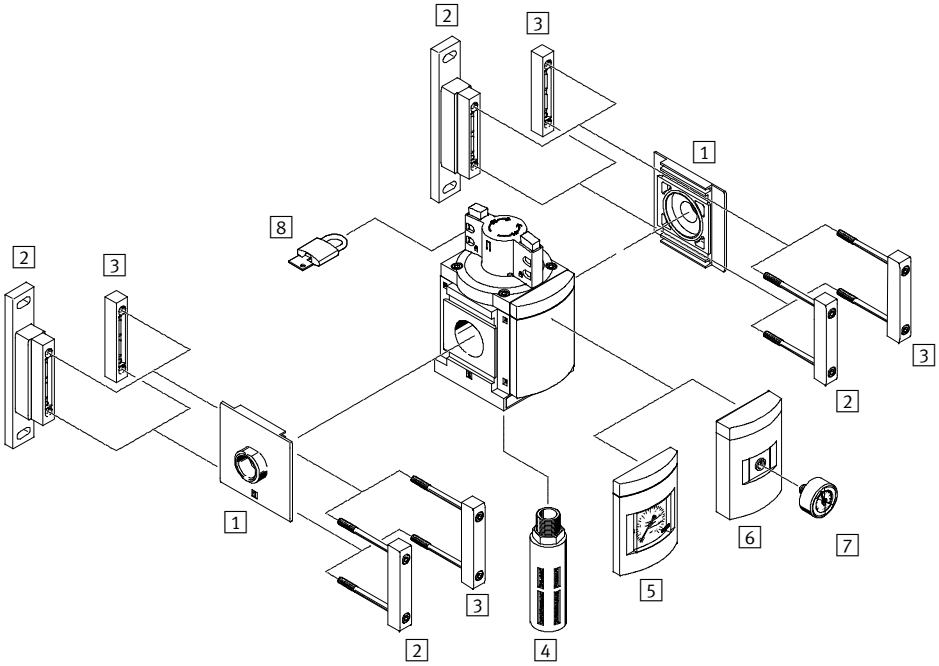

- Note

Additional accessories:

– Module connector for combination with size MS9 ➔ Internet: armv

Mounting attachments and accessories		➔ Page/Internet
1	Connecting plate MS12-AG...	ms12-ag
2	Mounting bracket MS12-WP	ms12-wp
3	Module connector MS12-MV	ms12-mv
4	Silencer U	107
5	MS pressure gauge AG	87
6	Adapter for EN pressure gauge ¼ A4	87
7	Pressure gauge MA	107
8	Padlock LRVS-D	107

On-off valves MS12-EM, MS series

Type codes

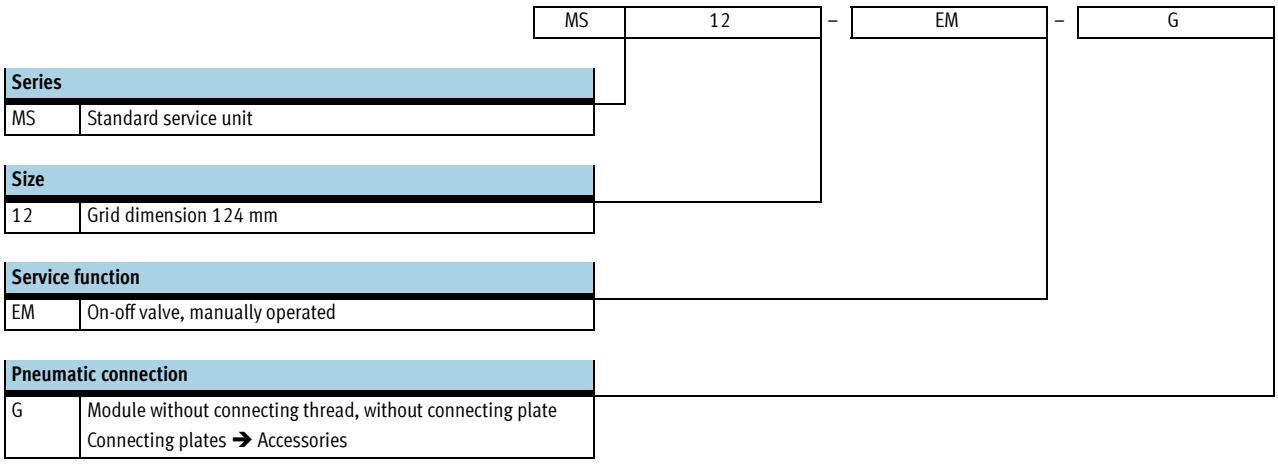

Series	
MS	Standard service unit

Size	
12	Grid dimension 124 mm

Service function	
EM	On-off valve, manually operated

Pneumatic connection	
G	Module without connecting thread, without connecting plate Connecting plates ➔ Accessories

Further variants can be ordered using the modular system ➔ 87

- Pneumatic connection
- Silencer
- Pressure gauge/pressure gauge alternatives
- Alternative pressure gauge scale
- Type of mounting
- Flow direction

On-off valves MS12-EM, MS series

Technical data

Function

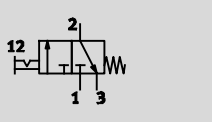

Flow rate
25,000 ... 32,000 l/min

Temperature range
–10 ... +60 °C

Operating pressure
0 ... 20 bar

- Manually operated on-off valve for pressurising and venting pneumatic installations
- Ducted exhaust possible via a threaded connection with silencer
- The switching position is immediately recognisable
- Actuator secured by locking the rotary knob
- Commercially available padlock can be used for security

General technical data		
Pneumatic connection 1, 2	G1 ... G2 (With connecting plate AG...)	– (Module without connecting thread, without connecting plate G)
Pneumatic connection 3	G1	
Design	Piston spool valve	
Type of mounting	Via accessories	
	In-line installation	
Assembly position	Any	
Valve function	3/2-way valve, double solenoid	
Exhaust function	Without flow control	
Switching position display	Knob actuator direction = flow direction	
Type of actuation	Direct	
Direction of flow	Non-reversible	

Note: This product conforms to ISO 1179-1 and to ISO 228-1

Standard nominal flow rate qnN[1] [l/min]	
In main flow direction 1 → 2	25,000 ... 32,000
In relief direction 2 → 3	13,000

1) Measured at p1 = 6 bar and Δp = 1 bar

Operating and environmental conditions		
Operating pressure	[bar]	0 ... 20
Operating medium		Compressed air in accordance with ISO 8573-1:2010 [–:–:–]
Ambient temperature	[°C]	–10 ... +60
Temperature of medium	[°C]	–10 ... +60
Corrosion resistance	CRC[1]	2

1) Corrosion resistance class 2 according to Festo standard 940 070
Components requiring moderate corrosion resistance. Externally visible parts with primarily decorative surface requirements which are in direct contact with a normal industrial environment or media such as coolants or lubricating agents.

On-off valves MS12-EM, MS series

Technical data

Weights [g]	
On-off valve	3,900
On-off valve with silencer S	4,000

Materials

Sectional view

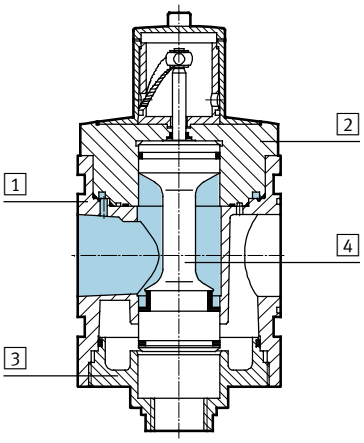

On-off valve		
1	Body	Die-cast aluminium
2	Cap, top	Aluminium
3	Cap, bottom	Aluminium
4	Valve spool	Stainless steel, POM, NBR
–	Springs	Steel
–	Covers/cover plates	PA
–	Seals	NBR
–	Connecting plate, module connector, mounting bracket	Die-cast aluminium
Note on materials		Free of copper and PTFE (not with variant AG)

Dimensions – Basic version

Download CAD data ➔ **www.festo.com**

Module without connecting thread, without connecting plate G, with cover plate

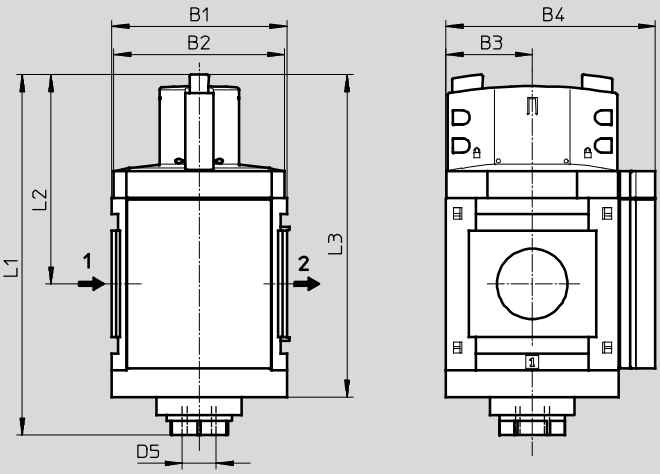

➔ Flow direction

Type	B1	B2	B3	B4	L1	L2	L3	D5
MS12-EM-G	124	122	61	148	255	148	228	G1

Dimensions – Silencer Download CAD data ➔ **www.festo.com**

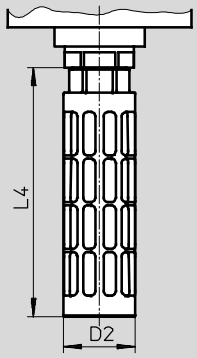

Type	D2 ∅	L4
MS12-EM-...-S	47.8	165.5

Dimensions – Pressure gauge/pressure gauge alternatives Download CAD data ➔ **www.festo.com**

Integrated MS pressure gauge AG, display unit [bar]

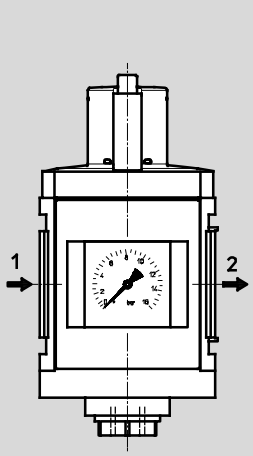

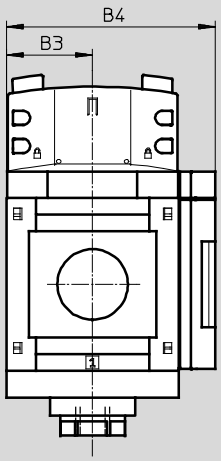

Adapter A4 for EN pressure gauge ¼, without pressure gauge

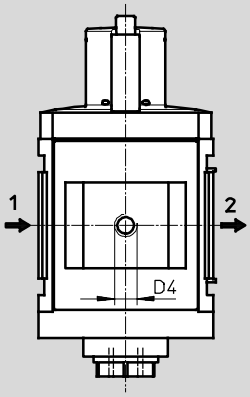

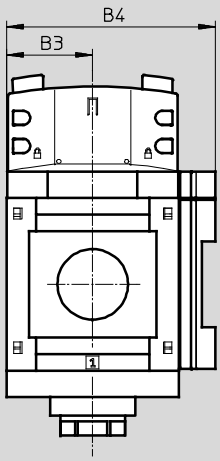

➔ Flow direction

Type	B3	B4	D4
MS12-EM-...-AG	61	148	–
MS12-EM-...-A4	61	148	G¼

Note: This product conforms to ISO 1179-1 and to ISO 228-1

Ordering data

Size	Connection	Part No.	Type
MS12	–	**541495**	**MS12-EM-G**[1)]

1) Free of copper and PTFE

Note: This product conforms to ISO 1179-1 and to ISO 228-1

On-off valves MS12-EM, MS series

Ordering data – Modular products

FESTO

M Mandatory data					O Options				
Module No.	Series	Size	Function	Pneumatic connection	Silencer	Pressure gauge/ pressure gauge alternatives	Alternative pressure gauge scale	Type of mounting	Flow direction
535031	MS	12	EM	AGF, AGG, AGH, AGI, G	S	AG, A4	PSI, MPA	WP	Z
Order example									
535031	MS	12	EM	G	S	AG	PSI		Z

Ordering table

Grid dimension [mm]		124	Conditions	Code		Enter code
M	Module No.	**535031**				
	Series	Standard		**MS**		MS
	Size	12		**12**		12
	Function	On-off valve, manual		**-EM**		-EM
	Pneumatic connection	Connecting plate G1		**-AGF**		
		Connecting plate G1¼		**-AGG**		
		Connecting plate G1½		**-AGH**		
		Connecting plate G2		**-AGI**		
		Module without connecting thread, without connecting plate		**-G**		
O	Silencer	Silencer		**-S**		
	Pressure gauge/pressure gauge alternatives	MS pressure gauge, bar		**-AG**		
		Adapter plate for EN pressure gauge ¼, without pressure gauge		**-A4**		
	Alternative pressure gauge scale	psi	1	**-PSI**		
		MPa	1	**-MPA**		
	Type of mounting	Mounting bracket	2	**-WP**		
	Flow direction	Flow direction from right to left		**-Z**		

1 **PSI, MPA** Only with pressure gauge AG.

2 **WP** Only with connecting plate AGF, AGG, AGH or AGI.

Transfer order code

535031	MS	12	–	EM	–		–		–		–		–		–	

On-off valves MS12-EE, MS series

Peripherals overview

On-off valves MS12-EE

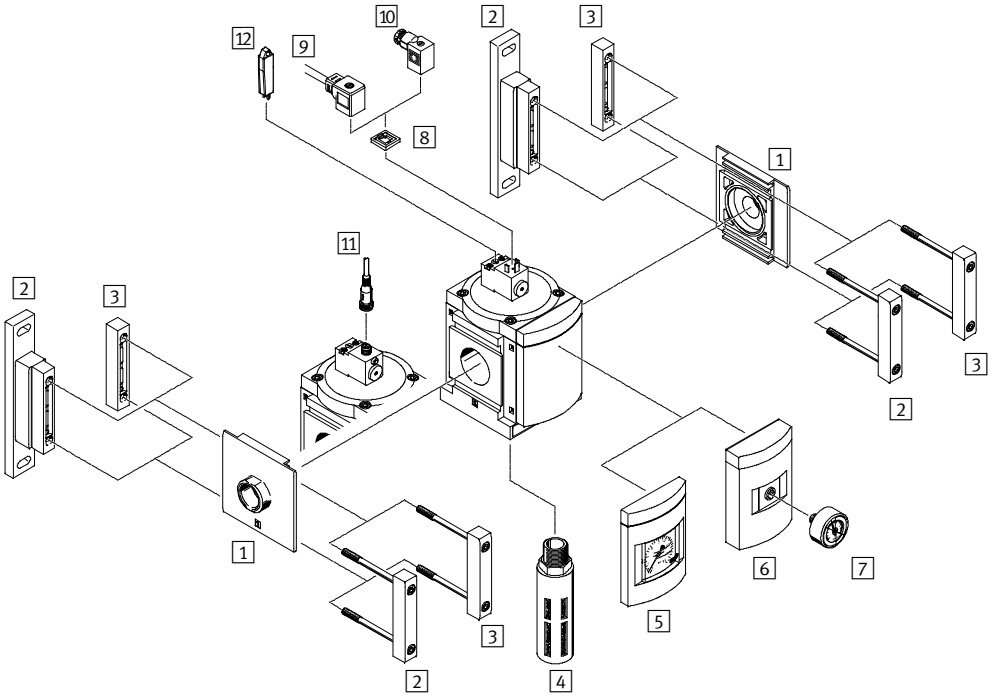

Note

Additional accessories:

– Module connector for combination with size MS9 ➔ Internet: armv

Mounting attachments and accessories		
		➔ Page/Internet
1	Connecting plate MS12-AG...	ms12-ag
2	Mounting bracket MS12-WP	ms12-wp
3	Module connector MS12-MV	ms12-mv
4	Silencer U	107
5	MS pressure gauge AG	93
6	Adapter for EN pressure gauge ¼ A4	93
7	Pressure gauge MA	107
8	Illuminating seal MC-LD	106
9	Plug socket with cable KMC	106
10	Plug socket MSSD-C	106
11	Connecting cable NEBU-M12...-LE4	107
12	Manual override AHB-MD/MF/MV	106

On-off valves MS12-EE, MS series

Type codes

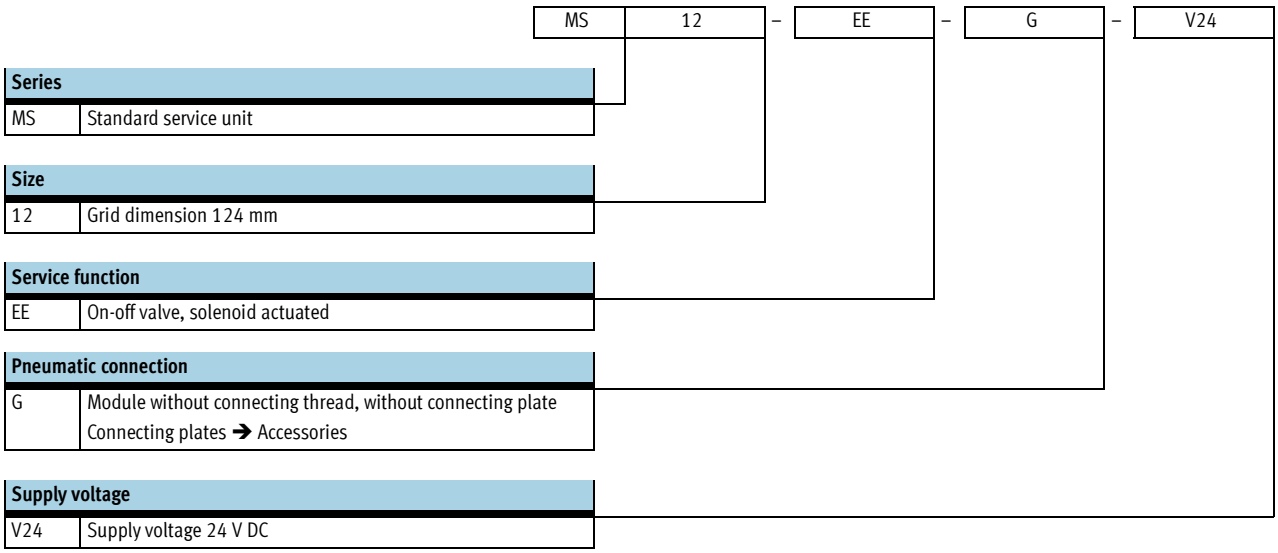

Further variants can be ordered using the modular system ➔ 93

- Pneumatic connection
- Supply voltage
- Silencer
- Pressure gauge/pressure gauge alternatives
- Alternative pressure gauge scale
- Type of mounting
- Flow direction

On-off valves MS12-EE, MS series

Technical data

Function

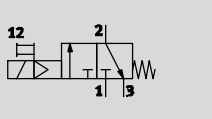

- Flow rate
  25,000 ... 32,000 l/min
- Temperature range
  –10 ... +50 °C
- Operating pressure
  3 ... 16 bar

- Solenoid actuated on-off valve for pressurising and venting pneumatic installations
- With solenoid coil without plug socket
- Three voltage ranges can be selected
- Ducted exhaust possible via a threaded connection with silencer
- Non-detenting and detenting manual override

General technical data		
Pneumatic connection 1, 2	G1 ... G2 (With connecting plate AG...)	– (Module without connecting thread, without connecting plate G)
Pneumatic connection 3	G1	
Design	Piston spool valve	
Type of mounting	Via accessories	
	In-line installation	
Assembly position	Any	
Valve function	3/2-way valve, single solenoid, closed	
Exhaust function	Without flow control	
Type of reset	Mechanical spring	
Switching position display	Via accessories	
	LED (with variant V24P)	
Type of actuation	Direct	
Pilot air supply	Internal	
Direction of flow	Non-reversible	

Note: This product conforms to ISO 1179-1 and to ISO 228-1

Electrical data		
Coil characteristics	V24/V24P	24 V DC: 4.5 W; perm. voltage fluctuations ±10%
	V110	110 V AC: 50 Hz; pick-up power 11.5 W; holding power 8.9 W; perm. voltage fluctuations ±10%
		110 V AC: 60 Hz; pick-up power 9.5 W; holding power 6.2 W; perm. voltage fluctuations ±10%
	V230	230 V AC: 50 Hz; pick-up power 11.5 W; holding power 9.1 W; perm. voltage fluctuations ±10%
		230 V AC: 60 Hz; pick-up power 9.5 W; holding power 6.4 W; perm. voltage fluctuations ±10%
Electrical connection	V24/V110/V230	Plug, square design to EN 175301-803, type A
	V24P	Plug M12, 4-pin to DESINA
Protection class for solenoid coil		IP65
Duty cycle [%]		100

Standard nominal flow rate qnN[1] [l/min]	
In main flow direction 1 → 2	25,000 ... 32,000
In relief direction 2 → 3	8,900

1) Measured at p1 = 6 bar and Δp = 1 bar

On-off valves MS12-EE, MS series

Technical data

Operating and environmental conditions		
Operating pressure	[bar]	3 ... 16
Operating medium		Compressed air in accordance with ISO 8573-1:2010 [–:–:–]
Ambient temperature	[°C]	–10 ... +50
Temperature of medium	[°C]	–10 ... +50
Corrosion resistance	CRC[1)]	2

1) Corrosion resistance class 2 according to Festo standard 940 070
Components requiring moderate corrosion resistance. Externally visible parts with primarily decorative surface requirements which are in direct contact with a normal industrial environment or media such as coolants or lubricating agents.

Weights [g]	
On-off valve	3,800
On-off valve with silencer S	3,900

Materials

Sectional view

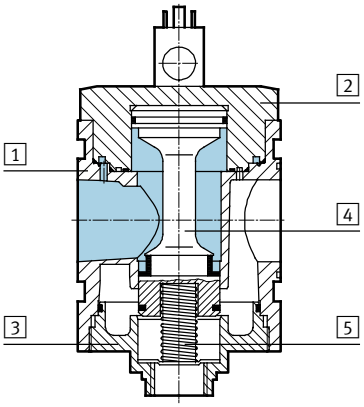

On-off valve		
1	Body	Die-cast aluminium
2	Cap, top	Aluminium
3	Cap, bottom	Aluminium
4	Valve spool	Stainless steel, POM, NBR
5	Springs	Steel
–	Covers/cover plates	PA
–	Seals	NBR
–	Connecting plate, module connector, mounting bracket	Die-cast aluminium
Note on materials		Free of copper and PTFE (not with variant AG)

Dimensions – Basic version

Download CAD data ➔ **www.festo.com**

Module without connecting thread, without connecting plate G, with cover plate

MS12-EE-G-V24/V110/V230

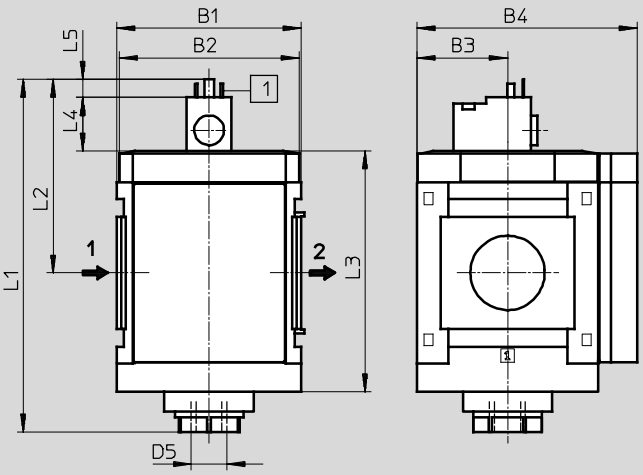

MS12-EE-G-V24P

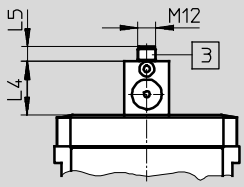

1 Plug connection to EN 175301-803
3 Plug connection M12, 4-pin to DESINA

➔ Flow direction

Type	B1	B2	B3	B4	L1	L2	L3	L4	L5	D5
MS12-EE-G-V24/V110/V230	124	122	61	148	237	130	162	35.7	12.3	G1
MS12-EE-G-V24P								36	10	

Dimensions – Silencer Download CAD data ➔ **www.festo.com**

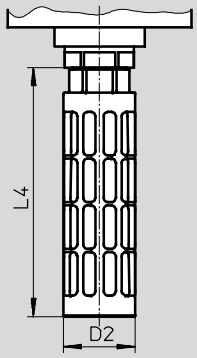

Type	D2 ∅	L4
MS12-EE-...-S	47.8	165.5

Dimensions – Pressure gauge/pressure gauge alternatives Download CAD data ➔ **www.festo.com**

Integrated MS pressure gauge AG, display unit [bar]

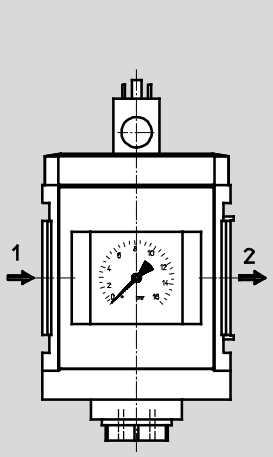

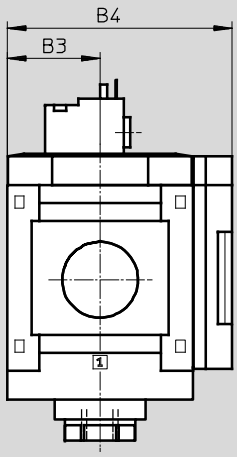

Adapter A4 for EN pressure gauge ¼, without pressure gauge

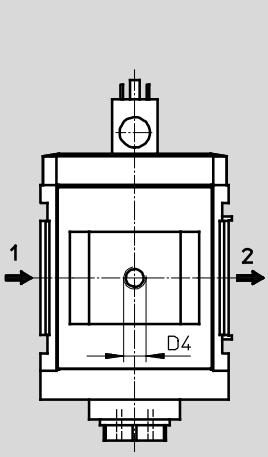

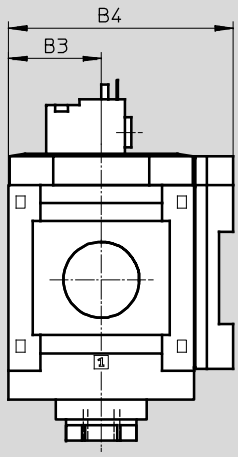

➔ Flow direction

Type	B3	B4	D4
MS12-EE-...-AG	61	148	–
MS12-EE-...-A4	61	148	G¼

Note: This product conforms to ISO 1179-1 and to ISO 228-1

Ordering data

Size	Connection	Supply voltage 24 V DC	
		Part No.	Type
MS12	–	**541496**	**MS12-EE-G-V24**[1)]

1) Free of copper and PTFE

Note: This product conforms to ISO 1179-1 and to ISO 228-1

On-off valves MS12-EE, MS series

Ordering data – Modular products

FESTO

M Mandatory data						O Options				
Module No.	Series	Size	Function	Pneumatic connection	Supply voltage	Silencer	Pressure gauge/pressure gauge alternatives	Alternative pressure gauge scale	Type of mounting	Flow direction
535032	MS	12	EE	AGF, AGG, AGH, AGI, G	V24, V24P, V110, V230	S	AG, A4	PSI, MPA	WP	Z
Order example										
535032	MS	12	EE	AGI	V110	S	AG	MPA	WP	

Ordering table

	Grid dimension [mm]	124	Conditions	Code	Enter code
M	Module No.	**535032**			
	Series	Standard		**MS**	MS
	Size	12		**12**	12
	Function	On-off valve, electrical		**-EE**	-EE
	Pneumatic connection	Connecting plate G1		**-AGF**	
		Connecting plate G1¼		**-AGG**	
		Connecting plate G1½		**-AGH**	
		Connecting plate G2		**-AGI**	
		Module without connecting thread, without connecting plate		**G**	
	Supply voltage	24 V DC (connection pattern to EN 175301), 16 bar		**-V24**	
		24 V DC plug (connection pattern M12 to DESINA), 16 bar		**-V24P**	
		110 V AC (connection pattern to EN 175301), 16 bar		**-V110**	
		230 V AC (connection pattern to EN 175301), 16 bar		**-V230**	
O	Silencer	Silencer		**-S**	
	Pressure gauge/pressure gauge alternatives	MS pressure gauge, bar		**-AG**	
		Adapter plate for EN pressure gauge ¼, without pressure gauge		**-A4**	
	Alternative pressure gauge scale	psi	1	**-PSI**	
		MPa	1	**-MPA**	
	Type of mounting	Mounting bracket	2	**-WP**	
	Flow direction	Flow direction from right to left		**-Z**	

1 **PSI, MPA** Only with pressure gauge AG.

2 **WP** Only with connecting plate AGF, AGG, AGH or AGI.

Transfer order code

535032	MS	12	–	EE	–		–		–		–		–		–	

Soft-start valves MS12-DL, MS series

Peripherals overview

Soft-start valves MS12-DL

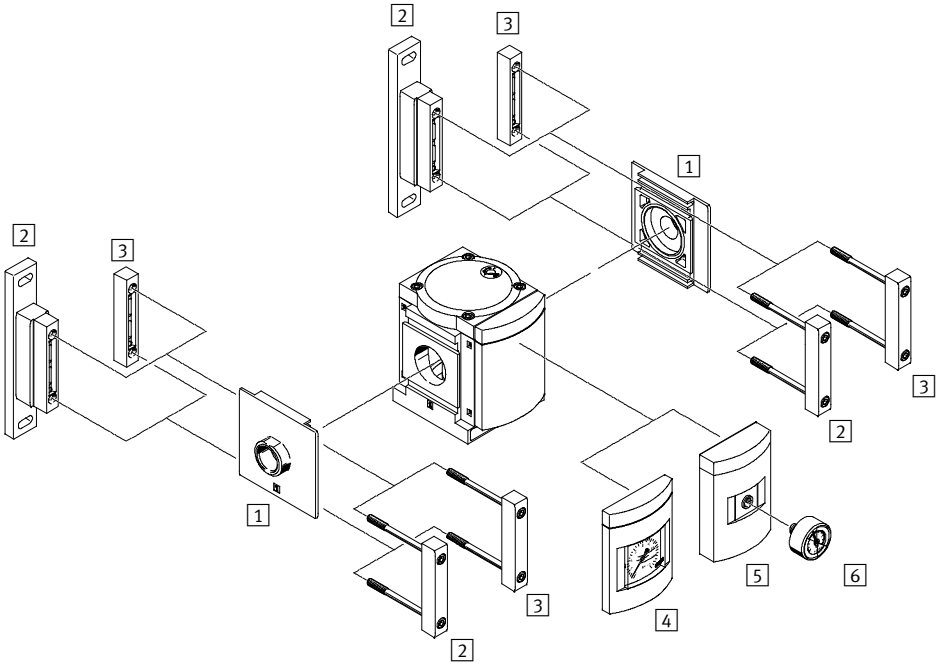

- Note

Additional accessories:

– Module connector for combination with size MS9 ➔ Internet: armv

Mounting attachments and accessories		➔ Page/Internet
1	Connecting plate MS12-AG...	ms12-ag
2	Mounting bracket MS12-WP	ms12-wp
3	Module connector MS12-MV	ms12-mv
4	MS pressure gauge AG	99
5	Adapter for EN pressure gauge ¼ A4	99
6	Pressure gauge MA	107

Soft-start valves MS12-DL, MS series

Type codes

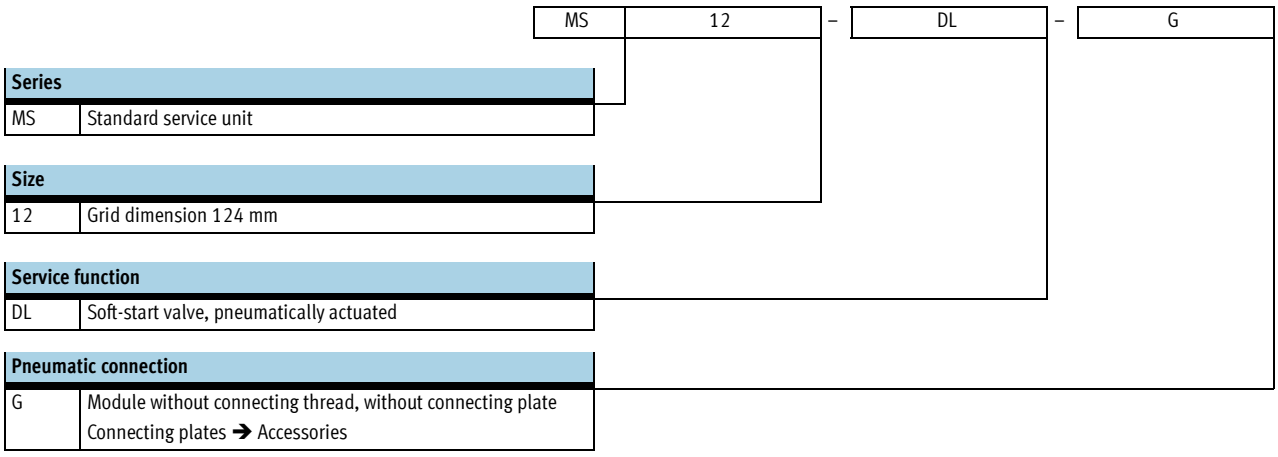

Series	
MS	Standard service unit

Size	
12	Grid dimension 124 mm

Service function	
DL	Soft-start valve, pneumatically actuated

Pneumatic connection	
G	Module without connecting thread, without connecting plate Connecting plates ➔ Accessories

Further variants can be ordered using the modular system ➔ 99

- Pneumatic connection
- Pressure gauge/pressure gauge alternatives
- Alternative pressure gauge scale
- Type of mounting
- Flow direction

Soft-start valves MS12-DL, MS series

Technical data

Function

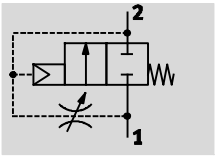

Flow rate
25,000 ... 42,000 l/min

Temperature range
–10 ... +60 °C

Operating pressure
2 ... 20 bar

The duration of the pressure build-up is adjusted using the restrictor attached to the valve cap.

The output pressure p2 rises slowly in accordance with the restrictor setting. The main seat opens when the switch-through pressure is reached.

- Pneumatically actuated soft-start valve for slowly pressurising and venting pneumatic installations (for use with on-off valves EM and EE)
- The drives advance slowly and reliably into the initial position
- Sudden and erratic movements are avoided
- Pressure switching approx. 50% of operating pressure
- Adjustable switching time delay

General technical data		
Pneumatic connection 1, 2	G1 ... G2 (With connecting plate AG...)	– (Module without connecting thread, without connecting plate G)
Design	Piston poppet valve	
Type of mounting	Via accessories	
	In-line installation	
Assembly position	Any	
Valve function	2/2-way valve	
Exhaust function	Flow control	
Type of reset	Mechanical spring	
Type of actuation	Direct	
Pilot air supply	Internal	
Direction of flow	Non-reversible	

Note: This product conforms to ISO 1179-1 and to ISO 228-1

Standard nominal flow rate qnN[1] [l/min]	
In main flow direction 1 → 2	25,000 ... 42,000
In relief direction 2 → 1	25,000 ... 42,000

1) Measured at p1 = 6 bar and p2 = 5 bar, Δp = 1 bar

Soft-start valves MS12-DL, MS series

Technical data

Operating and environmental conditions		
Operating pressure	[bar]	2 ... 20
Operating medium		Compressed air in accordance with ISO 8573-1:2010 [7:–:–]
Ambient temperature	[°C]	–10 ... +60
Temperature of medium	[°C]	–10 ... +60
Corrosion resistance	CRC[1)]	2

1) Corrosion resistance class 2 according to Festo standard 940 070
Components requiring moderate corrosion resistance. Externally visible parts with primarily decorative surface requirements which are in direct contact with a normal industrial environment or media such as coolants or lubricating agents.

Weights [g]	
Soft-start valve	3,600

Materials

Sectional view

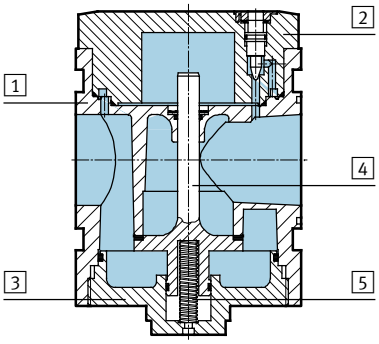

Soft-start valve		
1	Body	Die-cast aluminium
2	Cap, top	Aluminium
3	Cap, bottom	Aluminium
4	Valve stem	Aluminium, NBR
5	Springs	Steel
–	Covers/cover plates	PA
–	Seals	NBR
–	Connecting plate, module connector, mounting bracket	Die-cast aluminium
Note on materials		Free of copper and PTFE (not with variant AG)

Switching point – Pressure p as a function of time t

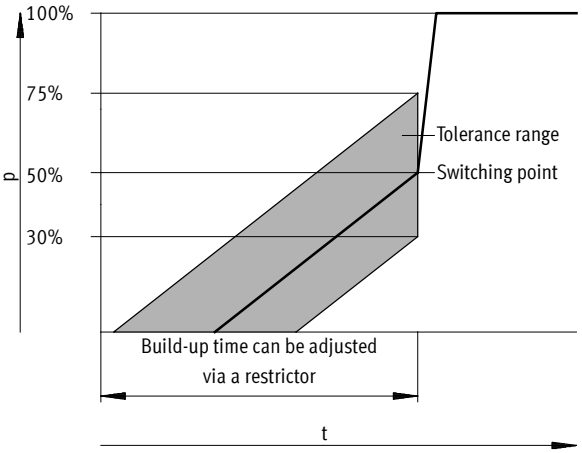

Note

The tolerance specification +25%/–20% of the switching point refers to the operating pressure p1.

Example: at an operating pressure of 4 bar a switching point of 1.2 bar to 3.0 bar is permitted.

Dimensions – Basic version Download CAD data ➔ **www.festo.com**

Module without connecting thread, without connecting plate G, with cover plate

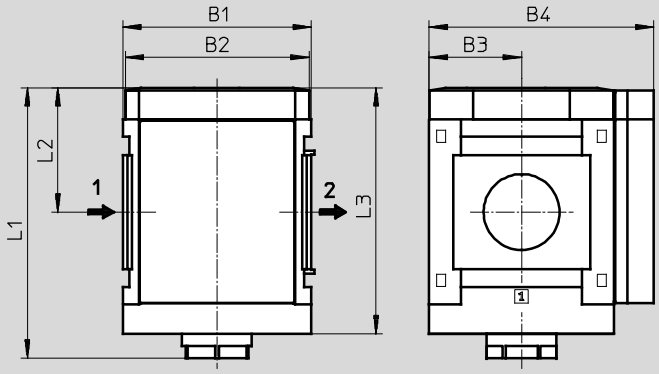

Type	B1	B2	B3	B4	L1	L2	L3
MS12-DL-G	124	122	61	148	178	82	162

Dimensions – Pressure gauge/pressure gauge alternatives Download CAD data ➔ **www.festo.com**

Integrated MS pressure gauge AG, display unit [bar]

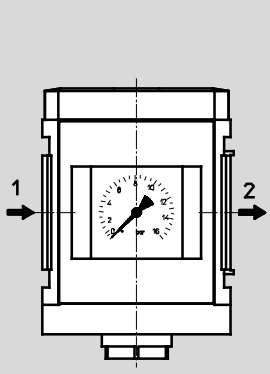

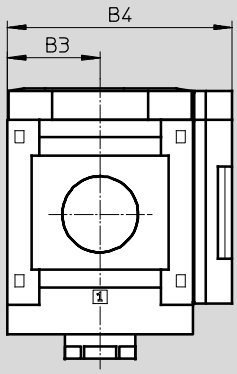

Adapter A4 for EN pressure gauge ¼, without pressure gauge

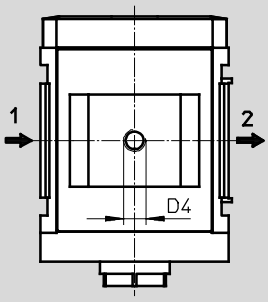

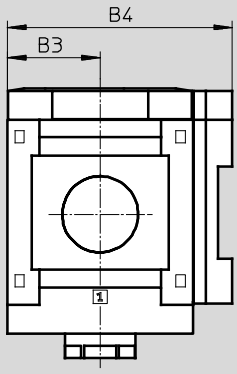

➔ Flow direction

Type	B3	B4	D4
MS12-DL-...-AG	61	148	–
MS12-DL-...-A4	61	148	G¼

Note: This product conforms to ISO 1179-1 and to ISO 228-1

Ordering data

Size	Connection	Part No.	Type
MS12	–	**541497**	**MS12-DL-G**[1)]

1) Free of copper and PTFE

Note: This product conforms to ISO 1179-1 and to ISO 228-1

Soft-start valves MS12-DL, MS series

Ordering data – Modular products

FESTO

M Mandatory data					O Options			
Module No.	**Series**	**Size**	**Function**	**Pneumatic connection**	**Pressure gauge/ pressure gauge alternatives**	**Alternative pressure gauge scale**	**Type of mounting**	**Flow direction**
535033	MS	12	DL	AGF, AGG, AGH, AGI, G	AG, A4	PSI, MPA	WP	Z
Order example								
535033	**MS**	**12**	**DL**	**AGI**	**AG**	**MPA**	**WP**	**Z**

Ordering table

Grid dimension [mm]		124	Condi-tions	Code		Enter code
M	Module No.	**535033**				
	Series	Standard		**MS**		MS
	Size	12		**12**		12
	Function	Soft-start valve, pneumatic		**-DL**		-DL
	Pneumatic connection	Connecting plate G1		**-AGF**		
		Connecting plate G1¼		**-AGG**		
		Connecting plate G1½		**-AGH**		
		Connecting plate G2		**-AGI**		
		Module without connecting thread, without connecting plate		**-G**		
O	Pressure gauge/pressure gauge alternatives	MS pressure gauge, bar		**-AG**		
		Adapter plate for EN pressure gauge ¼, without pressure gauge		**-A4**		
	Alternative pressure gauge scale	psi	1	**-PSI**		
		MPa	1	**-MPA**		
	Type of mounting	Mounting bracket	2	**-WP**		
	Flow direction	Flow direction from right to left		**-Z**		

1 **PSI, MPA** Only with pressure gauge AG.

2 **WP** Only with connecting plate AGF, AGG, AGH or AGI.

Transfer order code

535033	**MS**	**12**	–	**DL**	–		–		–		–		–	

Soft-start valves MS12-DE, MS series

Peripherals overview

Soft-start valves MS12-DE

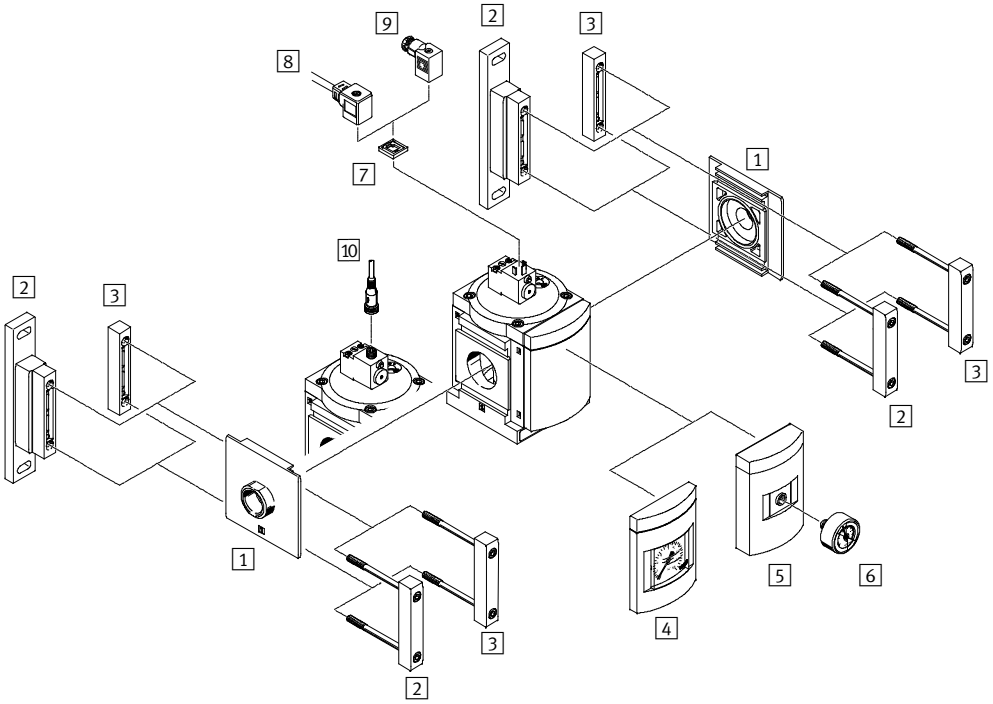

- Note

Additional accessories:

– Module connector for combination with size MS9 ➔ Internet: armv

Mounting attachments and accessories		
		➔ Page/Internet
1	Connecting plate MS12-AG...	ms12-ag
2	Mounting bracket MS12-WP	ms12-wp
3	Module connector MS12-MV	ms12-mv
4	MS pressure gauge AG	105
5	Adapter for EN pressure gauge ¼ A4	105
6	Pressure gauge MA	107
7	Illuminating seal MC-LD	106
8	Plug socket with cable KMC	106
9	Plug socket MSSD-C	106
10	Connecting cable NEBU-M12...-LE4	107

Soft-start valves MS12-DE, MS series

Type codes

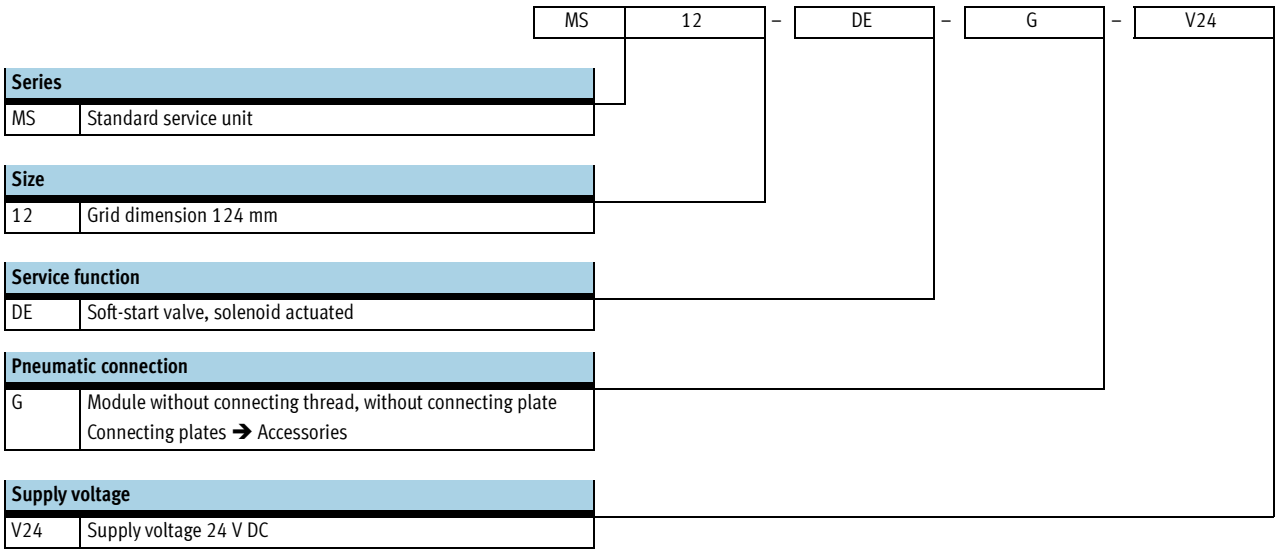

Series	
MS	Standard service unit

Size	
12	Grid dimension 124 mm

Service function	
DE	Soft-start valve, solenoid actuated

Pneumatic connection	
G	Module without connecting thread, without connecting plate Connecting plates ➔ Accessories

Supply voltage	
V24	Supply voltage 24 V DC

Further variants can be ordered using the modular system ➔ 105

- Pneumatic connection
- Supply voltage
- Pressure gauge/pressure gauge alternatives
- Alternative pressure gauge scale
- Type of mounting
- Flow direction

Soft-start valves MS12-DE, MS series

Technical data

Function

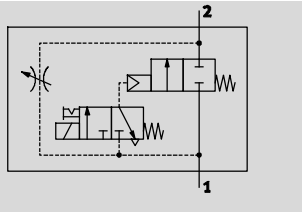

Flow rate
25,000 ... 42,000 l/min

Temperature range
–10 ... +50 °C

Operating pressure
3 ... 16 bar

The duration of the pressure build-up is adjusted using the restrictor attached to the valve cap.
The output pressure p2 rises slowly in accordance with the restrictor setting. Only the air flow from the restrictor is available when the solenoid valve is not actuated. The main seat is only opened by energising the solenoid valve.

When the solenoid valve is switched off, the main seat is closed and only the air flow from the flow control valve is available.
The solenoid valve should remain switched on in order to vent a system as this increases the flow rate from 2 and 1 and reduces the exhaust time.

- Solenoid actuated soft-start valve for slowly pressurising and venting pneumatic installations
- The drives advance slowly and reliably into the initial position
- Sudden and erratic movements are avoided
- With solenoid coil without plug socket
- Switch-through pressure can be exactly controlled using a solenoid valve
- Adjustable switching time delay
- Three voltage ranges can be selected
- Non-detenting and detenting manual override

General technical data		
Pneumatic connection 1, 2	G1 ... G2 (With connecting plate AG...)	– (Module without connecting thread, without connecting plate G)
Design	Piston poppet valve	
Type of mounting	Via accessories	
	In-line installation	
Assembly position	Any	
Valve function	2/2-way valve	
Exhaust function	Flow control	
Type of reset	Mechanical spring	
Switching position display	Via accessories	
	LED (with variant V24P)	
Type of actuation	Piloted	
Pilot air supply	Internal	
Direction of flow	Non-reversible	

Note: This product conforms to ISO 1179-1 and to ISO 228-1

Electrical data		
Coil characteristics	V24	24 V DC
	V24P	24 V DC
	V110	110 V AC
	V230	230 V AC
Electrical connection	V24/V110/V230	Plug, square design to EN 175301-803, type A
	V24P	Plug M12, 4-pin to DESINA
Protection class for solenoid coil		IP65
Duty cycle [%]		100

Soft-start valves MS12-DE, MS series

Technical data

Standard nominal flow rate qnN[1] [l/min]	
In main flow direction 1 → 2	25,000 ... 42,000
In relief direction 2 → 1[2]	25,000 ... 42,000

1) Measured at p1 = 6 bar and p2 = 5 bar, Δp = 1 bar
2) For energised solenoid valve

Operating and environmental conditions		
Operating pressure	[bar]	3 ... 16
Operating medium		Compressed air in accordance with ISO 8573-1:2010 [–:–:–]
Ambient temperature	[°C]	–10 ... +50
Temperature of medium	[°C]	–10 ... +50
Corrosion resistance	CRC[1]	2

1) Corrosion resistance class 2 according to Festo standard 940 070
Components requiring moderate corrosion resistance. Externally visible parts with primarily decorative surface requirements which are in direct contact with a normal industrial environment or media such as coolants or lubricating agents.

Weights [g]	
Soft-start valve	3,800

Materials

Sectional view

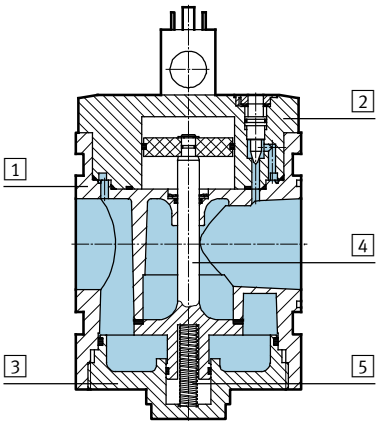

Soft-start valve		
1	Body	Die-cast aluminium
2	Cap, top	Aluminium
3	Cap, bottom	Aluminium
4	Valve stem	Aluminium, NBR
5	Springs	Steel
–	Covers/cover plates	PA
–	Seals	NBR
–	Connecting plate, module connector, mounting bracket	Die-cast aluminium
Note on materials		Free of copper and PTFE (not with variant AG)

Dimensions – Basic version

Download CAD data ➔ **www.festo.com**

Module without connecting thread, without connecting plate G, with cover plate

MS12-DE-G-V24/V110/V230

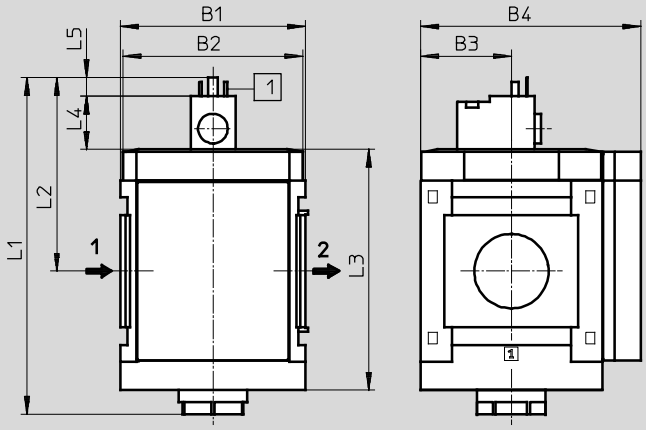

MS12-DE-G-V24P

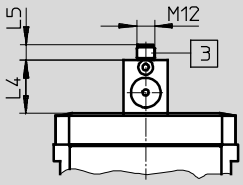

[1] Plug connection to EN 175301-803

[3] Plug connection M12, 4-pin to DESINA

➔ Flow direction

Type	B1	B2	B3	B4	L1	L2	L3	L4	L5
MS12-DE-G-V24/V110/V230	124	122	61	148	226	130	162	35.7	12.3
MS12-DE-G-V24P								36	10

Dimensions – Pressure gauge/pressure gauge alternatives

Download CAD data ➔ **www.festo.com**

Integrated MS pressure gauge AG, display unit [bar]

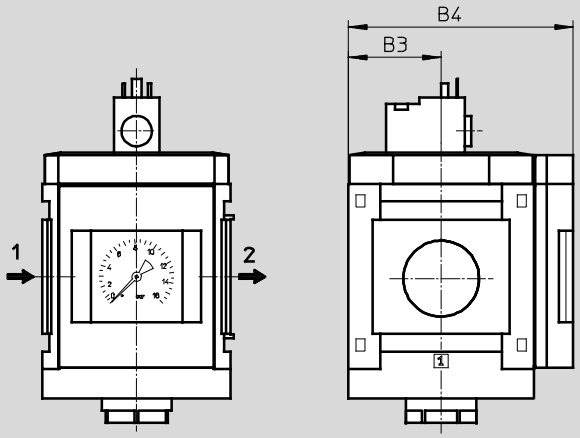

Adapter A4 for EN pressure gauge ¼, without pressure gauge

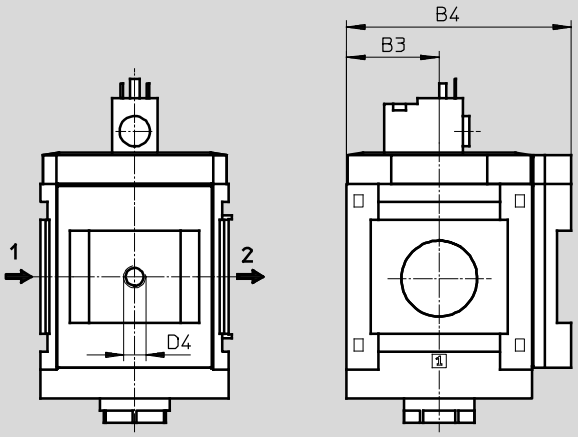

➔ Flow direction

Type	B3	B4	D4
MS12-DE-...-AG	61	148	–
MS12-DE-...-A4	61	148	G¼

Note: This product conforms to ISO 1179-1 and to ISO 228-1

Ordering data

Size	Connection	Supply voltage 24 V DC	
		Part No.	Type
MS12	–	**541498**	**MS12-DE-G-V24**[1)]

1) Free of copper and PTFE

Note: This product conforms to ISO 1179-1 and to ISO 228-1

Soft-start valves MS12-DE, MS series

Ordering data – Modular products

FESTO

M Mandatory data							O Options			
Module No.	Series	Size	Function	Pneumatic connection	Supply voltage	Pressure gauge/ pressure gauge alternatives	Alternative pressure gauge scale	Type of mounting	Flow direction
535034	MS	12	DE	AGF, AGG, AGH, AGI, G	V24, V24P, V110, V230	AG, A4	PSI, MPA	WP	Z
Order example									
535034	**MS**	**12**	**DE**	**AGH**	**V230**	**A4**		**WP**	**Z**

Ordering table

Grid dimension [mm]		124	Conditions	Code	Enter code
M	Module No.	**535034**			
	Series	Standard		**MS**	MS
	Size	12		**12**	12
	Function	Soft-start valve, electrical		**-DE**	-DE
	Pneumatic connection	Connecting plate G1		**-AGF**	
		Connecting plate G1¼		**-AGG**	
		Connecting plate G1½		**-AGH**	
		Connecting plate G2		**-AGI**	
		Module without connecting thread, without connecting plate		**-G**	
	Supply voltage	24 V DC (connection pattern to EN 175301), 16 bar		**-V24**	
		24 V DC plug (connection pattern M12 to DESINA), 16 bar		**-V24P**	
		110 V AC (connection pattern to EN 175301), 16 bar		**-V110**	
		230 V AC (connection pattern to EN 175301), 16 bar		**-V230**	
O	Pressure gauge/pressure gauge alternatives	MS pressure gauge, bar		**-AG**	
		Adapter plate for EN pressure gauge ¼, without pressure gauge		**-A4**	
	Alternative pressure gauge scale	psi	1	**-PSI**	
		MPa	1	**-MPA**	
	Type of mounting	Mounting bracket	2	**-WP**	
	Flow direction	Flow direction from right to left		**-Z**	

1 **PSI, MPA** Only with pressure gauge AG.

2 **WP** Only with connecting plate AGF, AGG, AGH or AGI.

Transfer order code

535034	**MS**	**12**	–	**DE**	–		–		–		–		–	

Ordering data – Plug socket MSSD — Technical data ➔ Internet: mssd

	Description		Electrical connection	Type of mounting cable connection	Part No.	Type
	for MS4/6-EE/DE	–	3-pin	Clamping screws	**151687**	**MSSD-EB**
			4-pin	Insulation displacement technology	**192745**	**MSSD-EB-S-M14**
		For use in the explosion protection area	3-pin	Clamping screws	**539712**	**MSSD-EB-M12**
	for MS9-EE, for MS12-EE/DE	–	3-pin	Clamping screws	**34583**	**MSSD-C**
			4-pin	Insulation displacement technology	**192748**	**MSSD-C-S-M16**

Ordering data – Plug socket with cable KMEB/KMC — Technical data ➔ Internet: kmeb, kmc

	Description	Operating voltage range	Electrical connection	Switching status display	Cable length [m]	Part No.	Type
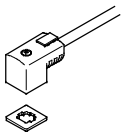	for MS4/6-EE/DE	24 V DC	2-pin	LED	2.5	**547268**	**KMEB-3-24-2,5-LED**
					5	**547269**	**KMEB-3-24-5-LED**
				–	2.5	**547270**	**KMEB-3-24-2,5**
					5	**547271**	**KMEB-3-24-5**
			3-pin	LED	2.5	**151688**	**KMEB-1-24-2,5-LED**
					5	**151689**	**KMEB-1-24-5-LED**
					10	**193457**	**KMEB-1-24-10-LED**
		230 V AC	3-pin	–	2.5	**151690**	**KMEB-1-230AC-2,5**
					5	**151691**	**KMEB-1-230AC-5**
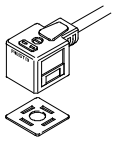	for MS9-EE, for MS12-EE/DE	24 V DC	3-pin	LED	2.5	**30931**	**KMC-1-24DC-2,5-LED**
					5	**30933**	**KMC-1-24DC-5-LED**
					10	**193459**	**KMC-1-24-10-LED**
		230 V AC	3-pin	–	2.5	**30932**	**KMC-1-230AC-2,5**
					5	**30934**	**KMC-1-230AC-5**

Ordering data – Illuminating seal MEB-LD/MC-LD — Technical data ➔ Internet: meb, mc

	Description	Operating voltage range	Part No.	Type
	for plug socket with cable KMEB and plug socket MSSD-EB	12 ... 24 V DC	**151717**	**MEB-LD-12-24DC**
		230 V DC/AC ±10%	**151718**	**MEB-LD-230AC**
	for plug socket with cable KMC and plug socket MSSD-C	12 ... 24 V DC	**19145**	**MC-LD-12-24DC**
		230 V DC/AC ±10%	**19146**	**MC-LD-230AC**

Ordering data – Locking clip CPV18-HV — Technical data ➔ Internet: cpv18-hv

	Description		Part No.	Type	PU[1]
	for MS4/6-EE/DE-...-V24	Cover for manual override, the clip prevents actuation	**530056**	**CPV18-HV**	**10**

1) Packaging unit quantity

Ordering data – Manual override AHB-MD/MF/MV — Technical data ➔ Internet: ahb

	Description		Part No.	Type
	for MS12-EE	Turn 90° to actuate and lock manual override	**157651**	**AHB-MD/MF/MV**

Ordering data – Connecting cable NEBU-M8 — Technical data ➔ Internet: nebu

	Electrical connection	Number of wires	Cable length [m]	Part No.	Type
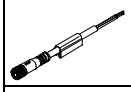	M8x1, straight socket	3	2.5	**541333**	**NEBU-M8G3-K-2.5-LE3**
			5	**541334**	**NEBU-M8G3-K-5-LE3**
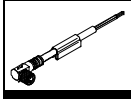	M8x1, angled socket	3	2.5	**541338**	**NEBU-M8W3-K-2.5-LE3**
			5	**541341**	**NEBU-M8W3-K-5-LE3**

Ordering data – Connecting cable NEBU-M12 — Technical data ➔ Internet: nebu

	Electrical connection	Number of wires	Cable length [m]	Part No.	Type
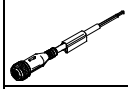	M12x1, straight socket	4	2.5	**550326**	**NEBU-M12G5-K-2.5-LE4**
			5	**541328**	**NEBU-M12G5-K-5-LE4**
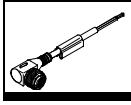	M12x1, angled socket	4	2.5	**550325**	**NEBU-M12W5-K-2.5-LE4**
			5	**541329**	**NEBU-M12W5-K-5-LE4**

Ordering data – Sensor socket SIE-GD — Technical data ➔ Internet: sie-gd

	Electrical connection	Part No.	Type
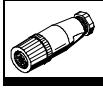	M12x1, 4-pin	**18494**	**SIE-GD**

Ordering data – Angled plug socket SIE-WD — Technical data ➔ Internet: sie-wd

	Electrical connection	Part No.	Type
	M12x1, 4-pin	**12956**	**SIE-WD-TR**

Ordering data – Silencer U — Technical data ➔ Internet: u

	Description	Pneumatic connection	Part No.	Type
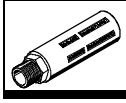	for MS4-EM1/EE	G¼	**6842**	**U-¼-B**
	for MS6-EM1/EE	G½	**6844**	**U-½-B**
	for MS9/12-EM/EE	G1	**151990**	**U-1-B**

Ordering data – Pressure gauge MA

	Nominal size	Pneumatic connection	Indicating range [bar]	Indicating range [psi]	Part No.	Type
	Pressure gauge MA, EN 837-1				Technical data ➔ Internet: ma	
	40	R¼	0 ... 16	0 ... 232	**187080**	**MA-40-16-R¼-EN**
			0 ... 25	0 ... 360	**187081**	**MA-40-25-R¼-EN**
		G¼	0 ... 16	0 ... 232	**183901**	**MA-40-16-G¼-EN**
			0 ... 25	0 ... 360	**183902**	**MA-40-25-G¼-EN**
	Pressure gauge MA, EN 837-1, with red-green range				Technical data ➔ Internet: ma	
	40	R⅛	0 ... 16	–	**525726**	**MA-40-16-R⅛-E-RG**
	50	R¼	0 ... 16	–	**525729**	**MA-50-16-R¼-E-RG**

Ordering data – Padlock LRVS-D

	Weight [g]	Part No.	Type
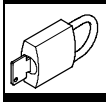	120	**193786**	**LRVS-D**